GUIDE TO FOUNDATION AND SUPPORT SYSTEMS FOR MANUFACTURED HOMES

Excellence in Design,

Manufacturing and Installation Series

Manufactured Housing Research Alliance MHRA

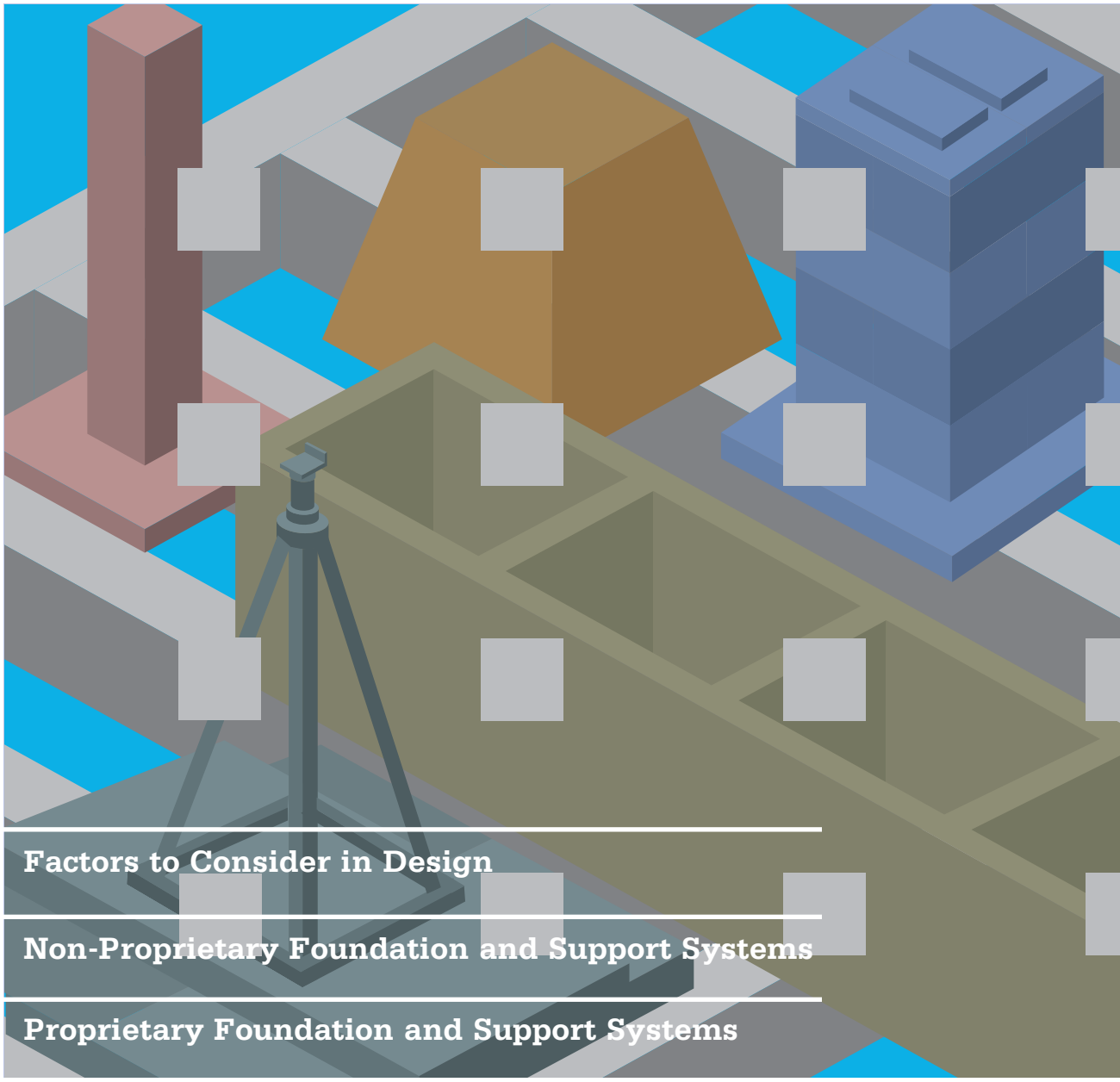

Factors to Consider in Design

Non-Proprietary Foundation and Support Systems

Proprietary Foundation and Support Systems

GUIDE TO FOUNDATION AND SUPPORT SYSTEMS FOR MANUFACTURED HOMES

Excellence in Design,

Manufacturing and Installation Series

Manufactured Housing Research Alliance MHRA

MHI Manufactured Housing Institute

U.S. Department of Housing and Urban Development

PD&R U.S. Department of Housing and Urban Development Office of Policy Development and Research

PATH Partnership for Advancing Technology in Housing

ACKNOWLEDGEMENTS

The Manufactured Housing Research Alliance wishes to acknowledge the assistance, advice, and guidance of a number of people without whose help this publication would not have been possible.

The effort was led by a project steering committee:

Bill Farish, *Fleetwood Enterprises*, Project Chair
Ed Bryant, *Champion Enterprises*
Charles Fanaro, *Hi-Tech Housing*
Bill Freeborne, *U.S. Department of Housing and Urban Development*
Andrea Vrankar, *U.S. Department of Housing and Urban Development*
Roger Walker, *Ventana Development, LLC*
Frank Walter, *Manufactured Housing Institute*

Other industry representatives whose advice and guidance helped shape the guide:

Gary Austin, *Mobile Corral Homes, Inc.*
J.R. Bader, *Mausten Home Sales*
David Conover, *National Evaluation Service*
Pamela B. Danner, *Danner and Associates*
Brian Fannon, *Sun Communities*
Siavash Farvardin, *National Evaluation Service*
Doug Gorman, *Home Mart*
John Ingargiola, *Federal Emergency Management Agency*
Therese P. McAllister, *Greenhorne & O'Mara*
Barry McCabe, *Hometown America Communities*
Gary McDaniel, *Chateau Communities*
Rick Mendlen, *U.S. Department of Housing and Urban Development*
George Porter, *Manufactured Housing Resources*
Roger Wendt, *Sunrise Home Service*

Companies that submitted designs or product information:

The Anchor Post Company, LLC
Asset Development Group
Chateau Communities
Cherry Hill Homes
CWS Communities
Fast Track Foundation Systems
Fleetwood Homes
Goff's Fleetwood Home Center
Jensen's, Inc.
JM Products, Inc
Oliver Technologies, Inc.
Tie Down Engineering
Ventana Development, LLC

Design, production, and editorial subcontractors:

Hoi L. Chu, *HLC Group*
Dorothy Foster
Jennifer Goode
Robert LaPointe

MHRA staff responsible for coordinating and facilitating development of the guide:

Emanuel Levy, Executive Director
Ed Salsbury, Project Coordinator
Sandra Ho, Editorial Director
Ian Klose, Staff
Kathleen Boodoo, Staff

DISCLAIMER OF WARRANTIES AND LIMITATION OF LIABILITIES

The authors, reviewers, the U.S. Department of Housing and Urban Development, the Manufactured Housing Institute, the Manufactured Housing Research Alliance, and any of their employees or representatives make no warranty, guarantee, or representation, expressed or implied, with respect to the accuracy, effectiveness, or usefulness of any information, method, or material in this document, and assumes no liability for the use of any information, methods, or materials disclosed herein, or for damages arising from such use. This publication is intended for the use of professional personnel who are competent to evaluate the significance and limitations of the reported information and who should accept responsibility for the application of the material it contains. All responsibility as to the appropriate use of information in this document is the responsibility of the reader or user.

The contents of this report are the view of the contractor and do not necessarily reflect the views or policies of the U.S. Department of Housing and Urban Development or the U.S. government.

Neither the U.S. government, nor MHRA endorses products or manufacturers. Trade or manufacturers' names that appear herein are used solely because they are considered essential to the objective of the report. Companies that appear in Chapter 4 paid a fee to include their material in the guide. All manufacturers are welcome to participate in future versions of the guide. Any claims made by a company were not independently verified by MHRA and makes no representation or warranties of any kind, either express or implied, including but not limited to warranties of title, noninfringement or implied warranties of merchantability or fitness for a particular purpose and expressly disclaims any liability with respect to the content or accuracy of this information. This is not a consumer report. There is no relative ranking of systems.

MHRA does not endorse, certify or control the foundation systems presented as case studies in Chapter 3 or the company proprietary foundation systems presented in Chapter 4. The views and opinions of the companies expressed in Chapter 4 do not necessarily state or reflect those of MHRA. MHRA shall not be used for advertising or product endorsement purposes. MHRA does not guarantee the accuracy, completeness, currency or reliability of the information submitted by the companies concerning their proprietary foundation systems. The information obtained from this guide is provided without warranties of any kind, either express or implied, including but not limited to warranties of title, noninfringement or implied warranties of merchantability or fitness for a particular purpose. The use of any information contained in these materials is voluntary, and reliance on it by the user should be undertaken after an independent review of its accuracy, completeness, currency and reliability.

The systems included in this guide are representative of the systems MHRA was aware of at the time of publication. MHRA does not imply that these are all of the systems that exist.

ISSN 1529-3424

Copyright © 2002 Manufactured Housing Research Alliance

COPYRIGHT NOTICES

Table 2.1, Figures 2.6 and 2.8 are Copyright 2000, International Code Council, Inc., Falls Church, Virginia. *2000 International Residential Code* and copyright *1995 One- and Two-Family Dwelling Code*. Reprinted with permission of the author. All rights reserved.

Figure 2.3 is Copyright 1996, BOCA International, Country Club Hills, Illinois. *BOCA National Building Code/1999* Commentary. Reproduced with permission. All rights reserved.

PHOTO CREDITS

Courtesy of Anchor Post Company: Figures 4.28-4.31.

Courtesy of Asset Development Group: Figure 3.44.

Courtesy of Cherry Hill Homes: Figures 3.25, 3.27, 3.28.

Courtesy of Goff's Fleetwood Homes: Figure 3.32.

Courtesy of Fast Track Foundations Systems: Figures 4.7-4.20.

Courtesy of Steve Hullibarger: Figures 1.3, 1.4, 2.4, 2.10, 3.9-3.19, 3.21, 3.22 3.48, 3.61, 3.62, 3.64, 3.65-3.67.

Courtesy of Jensen's, Inc.: Figures I.2, 1.2, 3.47, 3.49, 3.57.

Courtesy of JM Products: Figures 4.22-4.27.

Courtesy of Manufactured Housing Institute: Figures I.1, 1.1, 3.36, 3.46.

Courtesy of Oliver Technologies: Figures : 4.1-4.6.

Courtesy of Tie Down Engineering: Figures 4.32-4.41.

Courtesy of Ventana Development: Figures 3.30, 3.31, 3.68.

CONTENTS

Using the Guide	vii	
Chapter 1 Introduction	1.1	
	1.1	Why a Foundation and Support Systems Guide
	1.1	Purpose of the Guide
	1.2	How the Guide is Organized
	1.3	What the Words "Real Property Foundation" Mean
	1.4	What the Words "FHA Permanent Foundation" Mean
Chapter 2 Factors to Consider in Foundation Selection and Design	2.1	
	2.1	Site Conditions
	2.10	Major Design Factors
	2.11	Best Design Practices
Chapter 3 Individual Foundation Evaluations: Non-Proprietary Systems	3.1	
	3.2	Pier and Ground Anchor Support Systems
	3.6	Crawl Space Systems
	3.12	Case Study 1: Mt. Clemens, MI
	3.14	Case Study 2: Williamston, KY
	3.16	Case Study 3: Longmont, CO
	3.18	Case Study 4: Campbellsville, KY
	3.20	Case Study 5: Midwest
	3.22	Case Study 6: Midwest
	3.24	Case Study 7: Fond du Lac, WI
	3.26	Case Study 8: Kansas City, MO
	3.28	Case Study 9: Germantown, WI
	3.30	Slabs-on-Grade
	3.36	Case Study 10: Milwaukee, WI
	3.38	Case Study 11: Eau Claire, WI
	3.40	Case Study 12: Hyde Park, MD
	3.42	Basements
	3.48	Case Study 13: Midwest
	3.50	Case Study 14: Elizabethtown, PA
Chapter 4 Individual Foundation Evaluations: Proprietary Systems	4.1	
	4.2	All Steel Foundation System, Oliver Technologies, Inc.
	4.6	The Anchorpanel Foundation, Fast Track Foundation Systems
	4.10	Rigid Foundation Anchoring System, JM Products, Inc.
	4.14	The Storm Anchor System, The Anchor Post Company, LLC
	4.18	Vector Dynamics Foundation System, Tie Down Engineering
	4.22	Xi Foundation System, Tie Down Engineering
Appendices		
	A.1	A. References
	B.1	B. Additional Resources
	C.1	C. Glossary

USING THE GUIDE

The *Guide to Foundation and Support Systems for Manufactured Homes* contains information for many audiences, but it is written with one goal in mind: to help those in the industry responsible for selecting, designing, and installing foundations recognize the available options and make well-informed decisions.

Chapters 1 and 2 cover factors that influence the selection of a foundation system. These sections will help readers form a checklist of the many factors that enter into decisions about foundations. For the expert, they are a refresher and may suggest new ideas and approaches to foundation design and construction.

Figures I.1 and I.2
A new generation of foundation systems is offering a wider variety of designs and methods of securing the home to the ground.

Chapters 3 and 4 describe foundation systems. Chapter 3 describes the non-proprietary foundations systems. Chapter 4 describes proprietary foundation systems. Non-proprietary systems are made of components, such as concrete blocks, for which there are many suppliers. The non-proprietary design shows one way to build a system, such as a basement. There are many design approaches, as suggested by the case studies that accompany each non-proprietary system description. The case studies were culled from examples submitted by designers and installers operating in an array of manufactured housing markets. In contrast, proprietary systems are those in which part or all of the major components that comprise the foundation system are owned and usually patented by a single company.

Table I.1 is a quick reference to information about the foundation solutions presented in the guide and the page on which detailed explanation is given. The table helps differentiate among foundation systems and summarizes the attributes of each option. The factors described in the table are: initial cost, real property classification, installation time, use in flood-prone areas, use in seismic areas and use in areas subject to frost heave. These and other factors that enter into the design of all foundation systems, such as high wind areas, expansive soils, and termite damage, are described in Chapter 2.

Table I.1

Foundation System Type		Initial Cost[1]	Real Property Foundation[2]	Installation Time[3]	Use in Areas Subject to Frost Heave	Use in Flood Hazard Areas[4]	Use in Seismic Areas
	Page No.	See Page 2.10	See Page 1.3	See Page 2.10	See Page 2.4	See Page 2.5	See Page 2.7
NON-PROPRIETARY FOUNDATION SYSTEMS							
Pier and Ground Anchors	3.2	$	?[2]	◴	Y	Y	Y
Crawl Spaces	3.6	$$ – $$$	Y	◴ ◴	Y	Y	Y
Slabs	3.30	$$ – $$$	Y	◴ ◴	Y	Y	Y
Basements	3.42	$$$$	Y	◴ ◴ ◴	Y	N	Y
PROPRIETARY FOUNDATION SYSTEMS[5]							
The All Steel Foundation System, Oliver Technologies	4.2	$ – $$	Y	◴ – ◴ ◴	Y	Y	Y
The Anchorpanel Foundation, Fast Track Foundation	4.6	$ – $$	Y	◴ – ◴ ◴	Y	Y	Y
Rigid Foundation Anchoring System, JM Products	4.10	$ – $$	Y	◴ – ◴ ◴	Y	Y	Y
The Storm Anchor System, The Anchor Post Company	4.14	$ – $$	Y	◴ – ◴ ◴	Y	Y	Y
Vector Dynamics, Tie Down Engineering	4.18	$ – $$	Y	◴ – ◴ ◴	Y	Y	Y
Xi Foundation, Tie Down Engineering	4.22	$ – $$	Y	◴ – ◴ ◴	Y	Y	Y

[1] The symbols in this column are intended to suggest the relative magnitude of initial system costs, not absolute dollar figures. Initial costs are ranked from least ($) to most ($$$$) costly. As with any rating method, individual designs may be exceptions to these relative placements.

[2] The designation shown for non-proprietary real foundation systems is a general guideline. Such designation is subject to the manufacturer's verification and not all designs may qualify as a real property foundation. Real property foundation designations for proprietary foundation systems were determined by the companies that supply those products and have not been independently verified. **Whether a manufactured home may be classified as real property is determined by state or local laws. The U.S. Department of Housing and Urban Development policy regarding the use of ground anchors with homes that qualify for FHA insurance for real property loans is currently under review.**

[3] The symbols in this column are intended to suggest the relative time required to install the foundation or support system, not absolute installation times. Installation costs are ranked from requiring the least amount of time (◴) to the most amount of time (◴ ◴ ◴) to install. As with any rating method, individual designs may be exceptions to these relative placements.

[4] For use in flood hazard area, the lowest floor of a manufactured home shall be elevated to or above the base flood elevation (BFE) and be securely anchored to an adequately anchored foundation system to resist flotation, collapse, and lateral movement (44 CFR 60.3 (c)(6), with a 36-inch pier height exception rule for existing communities, at 60.3 (c)(12)(ii)—FEMA—National Flood Insurance Program).

[5] Entries for the proprietary foundation systems are provided by the companies and are not independently verified.

INTRODUCTION

The term "foundation" means all components of the support and anchoring system (that might include such features as piers, footings, slabs, walls, ties, anchoring equipment, ground anchors, or any other material or equipment) that supports a home and secures it to the ground.[6]

WHY A FOUNDATION AND SUPPORT SYSTEMS GUIDE

For as many types and varieties of manufactured homes as are now produced—with more to come—there are equally as many varieties of installation and support systems. This is the first guide to consider and compare the major foundation alternatives in use across the country. This guide was developed to fill this void with two goals in mind: to present a compilation of foundation ideas and inventions culled from experts and practitioners across the nation; and, to offer a range of practical and cost-competitive foundation solutions.

There is no single "best" foundation system. There is, however, a way to organize the process of deciding among alternative foundation designs that are appropriate for a given site and budget. The process starts with recognizing and prioritizing the major factors that influence the selection of the foundation system. Whether the main considerations are initial cost, frost heave resistance or a host of other issues, this information will help the reader focus on an appropriate foundation design. Understanding the foundation alternatives and proven design and installation practices is the next step. By presenting both sets of information, this guide helps narrow the field from many options and establish a methodical process for decision making.

Figure 1.1 Crane set of a multisection home onto a basement.

PURPOSE OF THE GUIDE

Users of this guide should find practical and helpful solutions to their individual situations. Whether the reader is a retailer trying to find better and more economical ways to deliver a finished home, a contractor faced with an unusual soil condition, or anyone wanting to better understand the alternatives, suggestions can be found in this guide. There are summaries and tables for quickly identifying appropriate foundation systems for a particular site and homebuyer, as well as technical details for direct application to the project at hand.

A source of first resort for foundation systems information

The guide is intended to be instrumental in fostering the wider dissemination of good ideas and "out of the box" thinking that characterizes the manufactured housing industry in general.

Foundation alternatives rather than a single best solution

Each system included in this compilation suggests advantages in at least some settings. Comments about the pros and cons, as well as the limitations of each system, are included.

When deciding among alternatives, several key conditions and objectives should be considered, such as: What is the budget? What kind of financing will be sought? What type of soil is found at the site? Is the area subject to frost?

[6] Depending on the context and application, the means for anchoring, supporting and otherwise securing a manufactured home to the ground is referred to as either the support system or foundation system. For simplicity, the term "foundation system" is used throughout this guide and should be interpreted broadly as including support and foundation systems.

Is the home being placed in a land-lease community or on private land? Is the area subject to high winds, floods, or deep frost penetration? This guide explains how these factors influence the selection and design of a foundation, and makes suggestions and recommendations.

Information on all types of systems

The intent of this document is to be inclusive and offer guidance on an array of foundation systems. However, since there are many design variations, the guide only begins to sort through the options. The guide also suggests a way of organizing foundation systems into categories that are helpful in understanding almost any foundation design. Often the home manufacturer's installation instructions provide guidance on design and construction of foundation and support systems. While this document is intended to complement the manufacturer's guidelines, where there are discrepancies between the two documents, the manufacturer's instructions should be followed.

A wide range of designs

Ideas and examples of foundation designs were solicited from all parts of the manufactured housing industry. As a result, practitioners willing to share their ideas suggested many very practical and proven concepts. Experts, including licensed professional engineers and contractors, reviewed each system that was submitted. Some designs were eliminated because they were too specialized in their applicability. The designs that are included are worthy of consideration for many types of applications, sites and design objectives.

Figure 1.2 Slabs are an increasingly popular foundation system for manufactured homes, especially in the Northeast.

HOW THE GUIDE IS ORGANIZED

The guide is organized into three sections as follows:

Chapter 2—Factors to consider in foundation selection and design

This section discusses the major factors that drive the choice of a foundation system and the issues that influence the specific design of a foundation. The factors, listed below and discussed in detail in Chapter 2, are used to rate the relative merits of foundation designs:

1. Site conditions
2. Major design factors
3. Best design practices

Chapter 3—Non-proprietary systems, built of readily available materials

This section covers four foundation classifications:

- Pier and ground anchor support systems (the most popular method of securing manufactured homes to the ground)
- Crawl space systems
- Slab-on-grade foundation systems
- Basements

A non-proprietary system is considered to be "in the public domain"—usable by anyone without paying a royalty, fee, or other consideration for its use. It is not a product of manufacturing or individual company output. Non-proprietary systems can be constructed by any qualified contractor, using materials available from most building suppliers.

Included in each foundation class is a series of case studies drawn from actual installations and contributed by practitioners from across the nation. The case studies suggest how a basic concept can be modified to meet the specific needs of a site, home design, or buyer preference.

Figure 1.3 Some foundations use a combination of interior piers and perimeter walls to support the home.

Chapter 4—Proprietary systems, wholly-owned by a single company

This section contains information about several proprietary foundation products marketed to the manufactured housing industry. A proprietary system is a product, manufactured by a company that owns some protectable interest in the design. Some are patented. There is spirited competition among manufacturers of these proprietary systems, resulting in rich choices for the retailer, builder, contractor and homebuyer.

The information contained in this section was prepared by the companies. The following products and companies are represented:

- All Steel Foundation, Oliver Technologies, Inc.
- The Anchorpanel®, Fast Track® Foundation Systems
- Rigid Foundation Anchoring System, JM Products, Inc.
- The Storm Anchor® System, The Anchor Post Company, LLC
- Vector Dynamics Foundation System, Tie Down Engineering
- Xi Foundation System, Tie Down Engineering

Figure 1.4 Some foundations are recessed to create a "site-built" look.

WHAT THE WORDS "REAL PROPERTY FOUNDATION" MEAN

Because of the rapid pace of advances in the manufactured housing industry, many customary and industry and phrases have changed or taken on new meanings. This is especially true when the subject is foundation systems.

For example, the manufactured home is the only type of residential dwelling intended to be used as either personal or "real property." Manufacturers often establish a special set of conditions for foundation systems intended for use with homes financed as real property with a mortgage or deed of trust. The techniques for supporting homes financed as either real or personal property are intended to result in properly engineered and reliable foundation systems. Whether used with real property or personal property, all foundation systems, including those in this guide, are meant to be safe, durable and long-lasting.

Nothing in this guide is intended to suggest that a home on any particular foundation system is or is not real property rather than personal property. In all cases, real or personal property status is determined by state or local laws that may or may not reference foundation type. Similarly, eligibility for conventional long-term financing is determined by underwriting standards that may or may not reference the foundation type or real versus personal property status.

WHAT THE WORDS "PERMANENT FOUNDATION" MEAN

The U.S. Department of Housing and Urban Development (HUD) defines permanent foundation systems in its *Manufactured Home Procedural and Enforcement Regulations* as follows:[7]

"(ii) A site-built permanent foundation is a system of supports, including piers, either partially or entirely below grade which is:

(A) Capable of transferring all design loads imposed by or upon the structure into soil or bedrock without failure,

(B) Placed at an adequate depth below grade to prevent frost damage, and

(C) Constructed of concrete, metal, treated lumber or wood, or grouted masonry."

It is beyond the scope and purpose of this guide to assess whether a particular foundation system meets this definition of performance, and would likely qualify for FHA Title II insurance. This is the responsibility of the FHA and its representatives. However, this guide contains useful information that the professional and consumer may want to consider in determining the appropriate foundation system to be used for a given installation.

Nearly 30 years ago when HUD adopted the nationally preemptive manufactured home standards, the stage was set for the explosive growth of the nation's primary source of unsubsidized affordable housing. The information contained in this guide is intended to complement and affirm this preemptive mandate and help the industry to continue to meet the nation's ever diversifying housing needs.

[7] *Part 3282: Manufactured Home Procedural and Enforcement Regulations.* 1999. Section 3282.12. Questions regarding whether or not a system qualifies under this definition can be referred to the U.S. Department of Housing and Urban Development, Office of Consumer and Regulatory Affairs, 451 7th St. S.W., Room 9156, Washington, DC 20410, phone: (202) 708-6409. The U.S. Department of Housing and Urban Development policy regarding the use of ground anchors with homes that qualify for FHA insurance for real property loans is currently under review.

FACTORS TO CONSIDER IN FOUNDATION SELECTION AND DESIGN

This section discusses the major factors that drive the choice of a foundation system and the issues that influence the specific design of a foundation. The factors, listed below and discussed in detail in Chapter 2, are used to rate the relative merits of foundation designs:

1. **Site conditions**
2. **Major design factors**
3. **Best design practices**

Decisions about foundation systems are based on many factors. This chapter presents the major considerations in selecting and designing foundation systems, although not all factors relate to every installation. Issues such as frost depth, seismic activity, and presence of flood plains have regional importance. Wherever possible, graphic information, such as maps, has been included to help correlate influential factors with regional occurrence.

To help organize the issues and navigate through the myriad factors that affect foundation design and selection, this chapter is divided into three parts.

- Part 1, **site conditions**, describes features and issues that are characteristic of the building site. These are factors that shape decisions about the foundation and over which the installer, designer, builder, or developer have little or no say. Each site comes with its own set of such conditions, and these features vary from site to site and region to region. These "givens" begin to suggest the better foundation systems for a specific site.
- Part 2, **major design factors**, covers conditions that are placed on to the building process, usually by the buyer, retailer, manufacturer and/or lender. The decisions related to these factors are discretionary and are often the primary considerations in choosing the type of foundation.
- Part 3, **basic design practices**, is a summary of best design and construction practices that can be applied in nearly all installations, although their relative importance can vary by type of foundation. A review of these factors during the design process will help avoid costly mistakes.

1. SITE CONDITIONS

Characteristics of major soil types

The United States has a wide variety of soils. Since it is the soil that supports the home, understanding the properties of different soil types is fundamental to sound foundation selection and design (see **Table 2.1**). Certain soils have relatively little ability to support weight. Some become more or less supportive when wet or dry. Others may expand or shrink when moisture is present. Some soils will compact well, and others won't. Whatever the soil condition, knowledge of foundation system alternatives can help save money and possibly contribute to the long-term durability of the home.

Figure 2.1 Soil test torque probe measures soil bearing capacity for soil classification.

Knowledge of these general soil types and how soil properties affect foundation design is important for a contractor and others involved in the home installation, including retailers and installers. In most cases it isn't necessary to make a detailed analysis of the soil types. However, it is advisable to pay careful attention to the impact that unusual or troublesome soils can have on a home.

Table 2.1 **The Properties of Soil**

Soil Description	Value as a foundation material	Drainage characteristics[8]	Susceptibility to frost heave	Volume change potential expansion[9]
Well-graded gravels, gravel-sand mixtures, little or no fines	Excellent	Good	Low	Low
Poorly graded gravels or gravel-sand mixtures, little or no fines	Good	Good	Low	Low
Well-graded sands, gravelly sands, little or no fines	Good	Good	Low	Low
Poorly graded sands or gravelly sands, little or no fines	Good	Good	Low	Low
Silty gravels, gravel-sand-silt mixtures	Good	Good	Medium	Low
Clayey gravels, gravel-sand-clay mixtures	Good	Medium	Medium	Low
Silty sand, sand-silt mixtures	Fair	Good	Medium	Low
Clayey gravels, sand-clay mixture	Fair	Medium	Medium	Low
Inorganic silts and very fine sands, rock flour, silty or clayey fine sands or clayey silts with slight plasticity	Fair	Medium	High	Low
Inorganic clays of low to medium plasticity, gravelly clays, sandy clays, silty clays, lean clays	Fair	Medium	Medium	Medium to low
Inorganic silts, micaceous or diatomaceous fine sandy or silty soils, elastic silts	Poor	Poor	High	High
Organic silts and organic silty clays of low plasticity	Poor	Poor	Medium	Medium
Inorganic clays of high plasticity, fat clays	Very Poor	Poor	Medium	High
Organic clays of medium to high plasticity, organic silts	Very Poor	Unsatisfactory	Medium	High
Peat and other highly organic soils	Not suitable	Unsatisfactory	Medium	High

SOURCE: *2000 International Residential Code®*

8 The percolation rate for good drainage is over 4 in. per hour, medium drainage is 2 –4 in. per hour, and poor is less than 2 in. per hour.

9 Soils with a low potential expansion typically have a plasticity index (PI) of 0–15, soils with a medium potential expansion have a PI of 10–35, and soils with a high potential expansion have a PI greater than 20.

One important measure of the ability of soil to support the weight of the home is its bearing capacity, a value representing the weight that one square foot (sq ft) of earth surface is capable of supporting without risk of subsiding. This information may already be available from the local building department or from a local engineer. Values range from less than 1,000 lbs per square foot (psf) to more than 4,000 psf.

Other problems can arise when foundation systems are placed on soils that contain a high percentage of organic matter or on fill soil. Excessive organic matter should be removed and fill properly compacted.

Special mention should be made of a broad group of "expansive" soils. Expansive soils significantly change volume as they absorb water. Highly active soils (see **Figure 2.2**) are particularly prone to shifting as water content rises and falls. Special building practices have been developed for homes in areas with expansive soils. These are areas where local engineers should be consulted before designing a foundation system. Slabs-on-grade foundation systems are often desirable in areas with expansive soils.

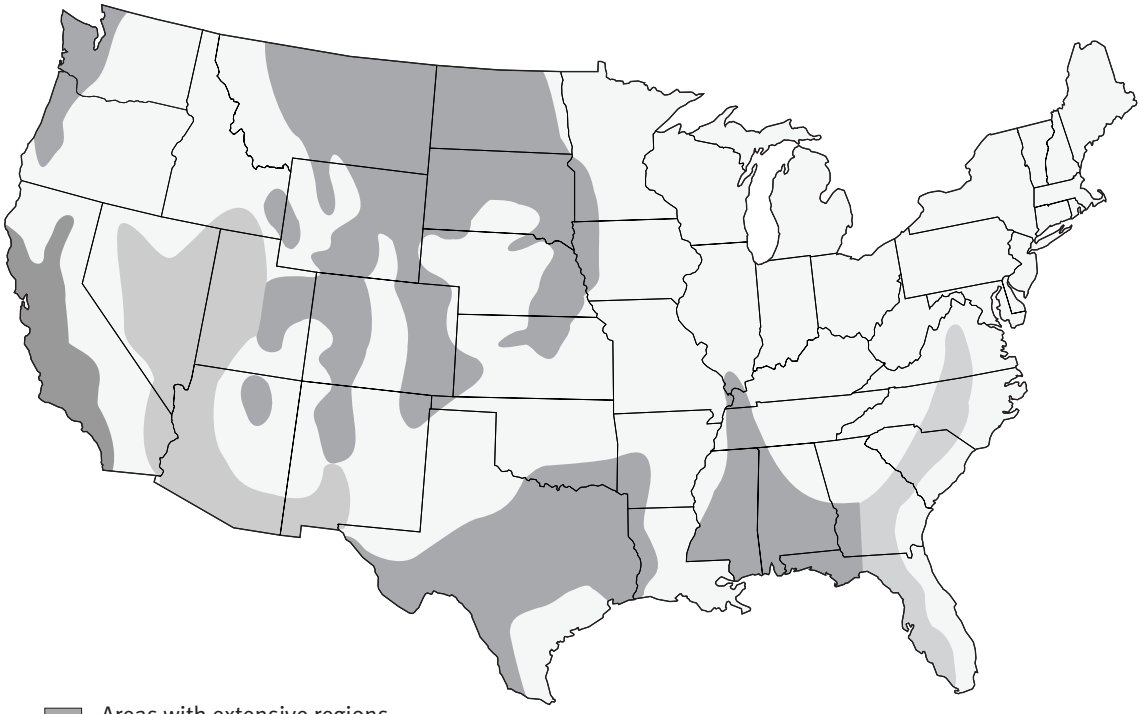

Areas with extensive regions with highly active soils

Areas with extensive regions with less active soils

Areas with soils that are predominantly not active

NOTE: In areas of the map with highly active soils, there will be many locations with no expansive soils. Conversely, in the areas of the map with the least active soils, expansive soils can be found in some locations.

SOURCE: *Oak Ridge National Laboratory (ORNL) Building Foundation Design Handbook,* 1988.

Figure 2.2 Map of Expansive Soil Regions

Areas subject to frost heave

Frost is a critical element in foundation system selection and design in many parts of the country. Frost depth is simply the known depth in the ground to which water in the soil is known to freeze. The maximum frost depth (also known as frost line) is often displayed on isobar maps (see **Figure 2.3**). Local building codes generally indicate the frost depth to which a foundation must be excavated to reach below the frost line.

When water in the soil freezes, it expands and may cause the structure above it to shift (heave). This can affect any building resting on such ground.

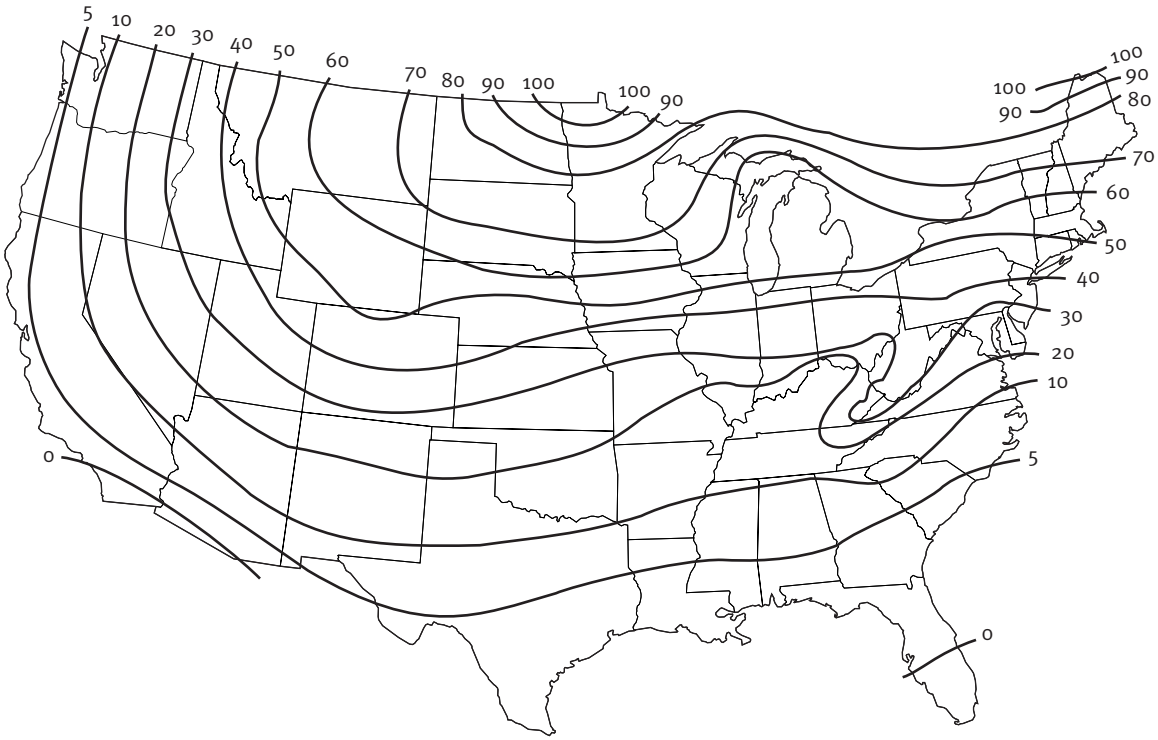

SOURCE: International Code Council, Inc. *BOCA National Building Code/1999 Commentary*

Figure 2.3 Severe Frost Penetration Map (inches)

There are several ways to protect a manufactured home foundation system in areas subject to ground frost heave, including the following:

- Extend the footing to below the frost line (see **Figure 2.4**). Consult local authorities to determine the depth of the frost line. In the absence of a local code, **Figure 2.3** is a conservative guide.
- Remove the soil below the footings to a depth below the frost line and replace it with coarse sand and/or gravel. The sand and/or gravel should be compacted in 6- to 8-in. lifts to reduce settlement. If the high water table in the ground is above the frost line, install drainage tile in the bottom of the sand and/or gravel fill to provide a permanent means to drain ground water away from under the footings.[10]

Figure 2.4 Recessing the foundation to a depth below the frost line.

[10] For more information refer to Myers, Ned C. 1996. *Manufactured Home Foundation Design for Seasonally Frozen Ground*.

- Use an uninsulated slab designed to move with the soil as and if it shifts when the soil freezes. This type of slab is often referred to as "floating."
- Use an insulated slab or crawl space that does not extend below the frost line but is intended to remain stationary even as the surrounding ground freezes. The insulation wraps around the outside of the foundation and prevents the soil directly under the home from freezing. These designs require the use of thermostatically controlled vents that close during freezing periods to keep the air space under the home at a temperature warmer than the outside.[11]

Flood hazard areas

Unless proper precautions are taken, homes located in low-lying sites near waterways or along the coasts are at risk of flood damage. Riverine flooding takes place when excessive runoff causes a stream or river to overflow its normal channel. Coastal flooding normally is the result of ocean storms, which can be severe.

Flood hazard areas are referred to as flood plains. Flood plains, outside the floodway, may become inundated with rising water that has little or no movement. It is possible to minimize or eliminate the risk of damage to homes located in the flood plain. A flood plain may, however, contain floodways, an identified area where the risk of damage from moving water and the debris that it may carry is so great that it prohibits residential construction.

The first step when dealing with a building site within a flood plain is to verify that it is outside of the floodway. The Federal Emergency Management Agency (FEMA) and its local flood plain administrator are the best sources of information about the history of local floods and potential for flood damage.[12]

In addition to identifying areas subject to varying degrees of flood severity, FEMA's flood maps are used to determine zones for National Flood Insurance Program (NFIP) premium rates. In a flood plain, the lowest floor is located at or above the Base Flood Elevation (BFE). The BFE, also referred to as "100-year flood" level, is indicated on the Flood Insurance Rate Map (FIRM) available from the local FEMA administrator. FEMA's flood maps indicate the areas where the land is below the BFE. New homes installed with the first floor (including a basement floor) below the BFE are ineligible for the NFIP rates (certain exceptions apply; consult 44 CFR 60.3, local flood plain ordinance). In most cases, homes below the BFE are ineligible for any form of federally supported financing and other types of disaster assistance.

If properly designed, crawl space foundation systems can be used in flood plains. Other suitable foundation systems include reinforced piers and pile foundation systems. Basements, by definition, involve substantial excavation and the creation of below-grade living areas. This automatically disqualifies them from participating in the NFIP. Finally, slabs may be acceptable, assuming the home itself is sufficiently elevated above the ground.[13]

---

[11] For more information refer to Myers, Ned C. 1996. *Manufactured Home Foundation Design for Seasonally Frozen Ground*.

[12] Maps denoting flood areas are available from the FEMA flood map repository. The maps can be ordered by calling: 1-800-358-9616, or by visiting the map order Web site at: www.msc.fema.gov/MSC/product.htm.

[13] For more information about building in the flood plain, consult 44 CFR 60.3, local flood plain ordinance, and FEMA guidelines, including *Manufactured Home Installation In Flood Hazard Areas, FEMA 85* (September 1985). As this guide goes to press, FEMA is in process of revising and updating the FEMA 85 document.

Wind Loads

The southeast coast of the United States is prone to tropical storms and hurricanes. Foundation design and selection in these areas often is subject to local code wind speed minimums (see **Figure 2.5**). Where hurricanes are common, the selection of a foundation system must take into consideration its ability to hold a home down in hurricane winds.

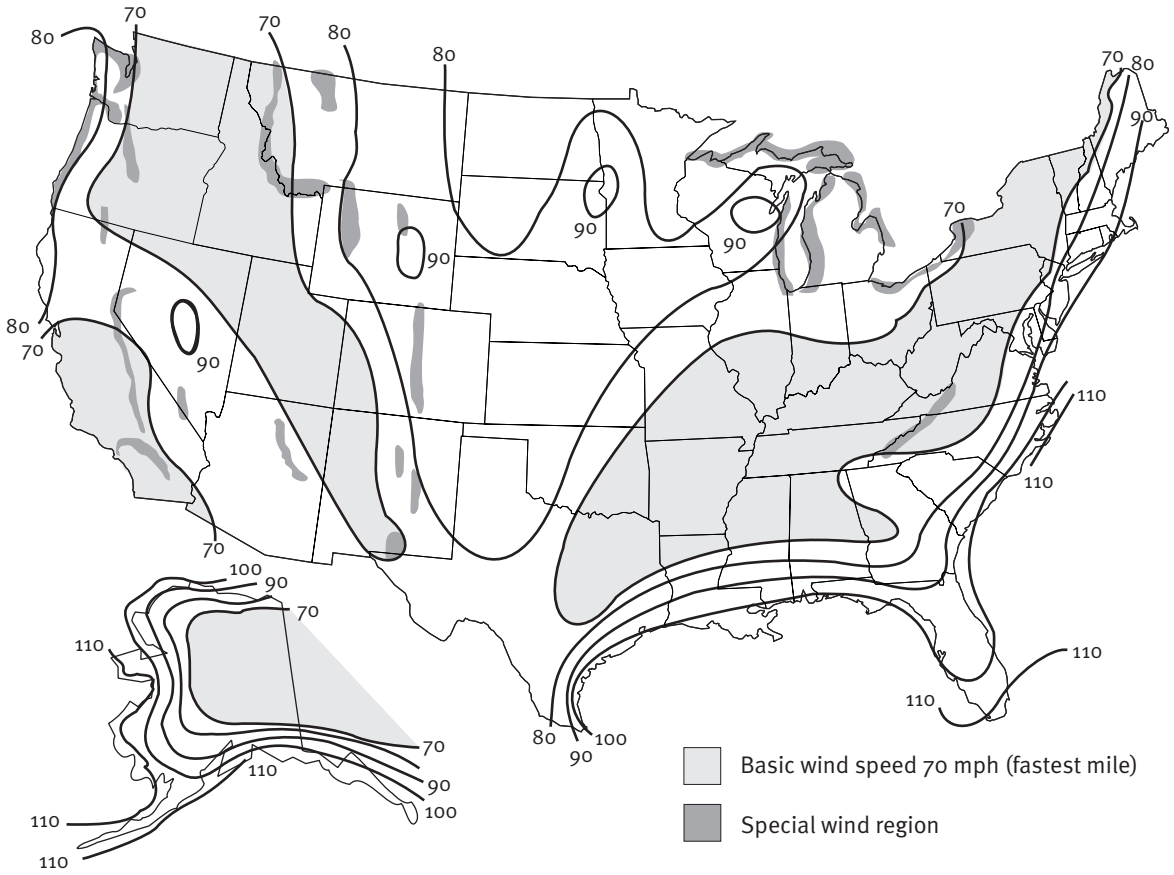

NOTES:

1. Values are fastest-mile speeds at 33 ft. (10m) above ground for exposure category C and are associated with an annual probability of 0.02.
2. Linear interpolation between wind speed contours is acceptable.
3. Caution in the use of wind speed contours in mountainous regions of Alaska is advised.
4. The ASCE 7-98, 2000, at Figure 6-1, shows wind speed values as 3-second gusts, with a revised map.

SOURCE: *ASCE 7-88, 1990, American Society of Civil Engineers - Minimum Design Loads for Buildings and Other Structures, Fig.1, Basic Wind Speed (mph).*

Figure 2.5 Basic Wind Speed Map (fastest wind speed, mph)

Seismic areas

Parts of the West Coast and certain other mid-continent locations are subject to earthquakes that can move a home off its foundation (see **Figure 2.6**). Since HUD-code homes are engineered to resist the severe forces and stresses that occur during transportation at highway speeds, they are particularly well suited to survive earthquakes with little damage.

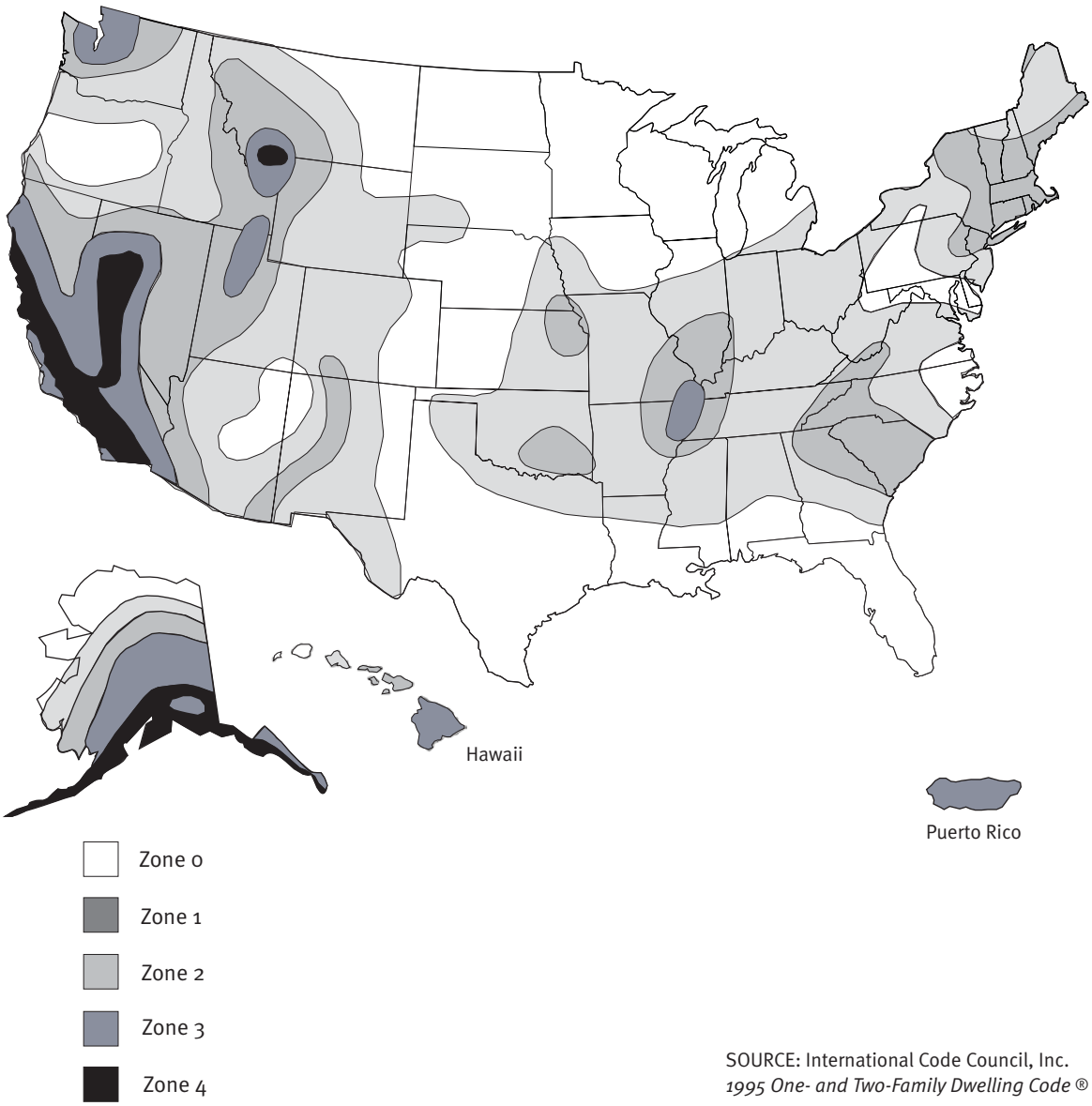

SOURCE: International Code Council, Inc.
1995 One- and Two-Family Dwelling Code ®

Figure 2.6 Seismic Zone Map

Snow loads

Snowfall in northern and mountain regions can impose a heavy load on a roof and through a structure to its foundation (see **Figure 2.7**). The locally mandated roof snow load requirements should be checked. The foundation selected must support the home with of the specified extra weight from snow and ice.

Homes designed with a minimum snow (or "live") load (20 psf) often do not require any perimeter wall support. As the roof live load capacities increase, manufacturers typically require that the home be supported along the perimeter with blocking. As the design load increases, so does the number of such support points. One of the methods manufacturers may require is additional support under the edges of doors and large windows.

The manufacturer's specifications describing methods to support the higher roof design loads are quite easy to incorporate into most of the foundation systems described in this guide. The contractor should verify and reconcile the snow load requirements, the manufacturer's instructions, and the foundation design.

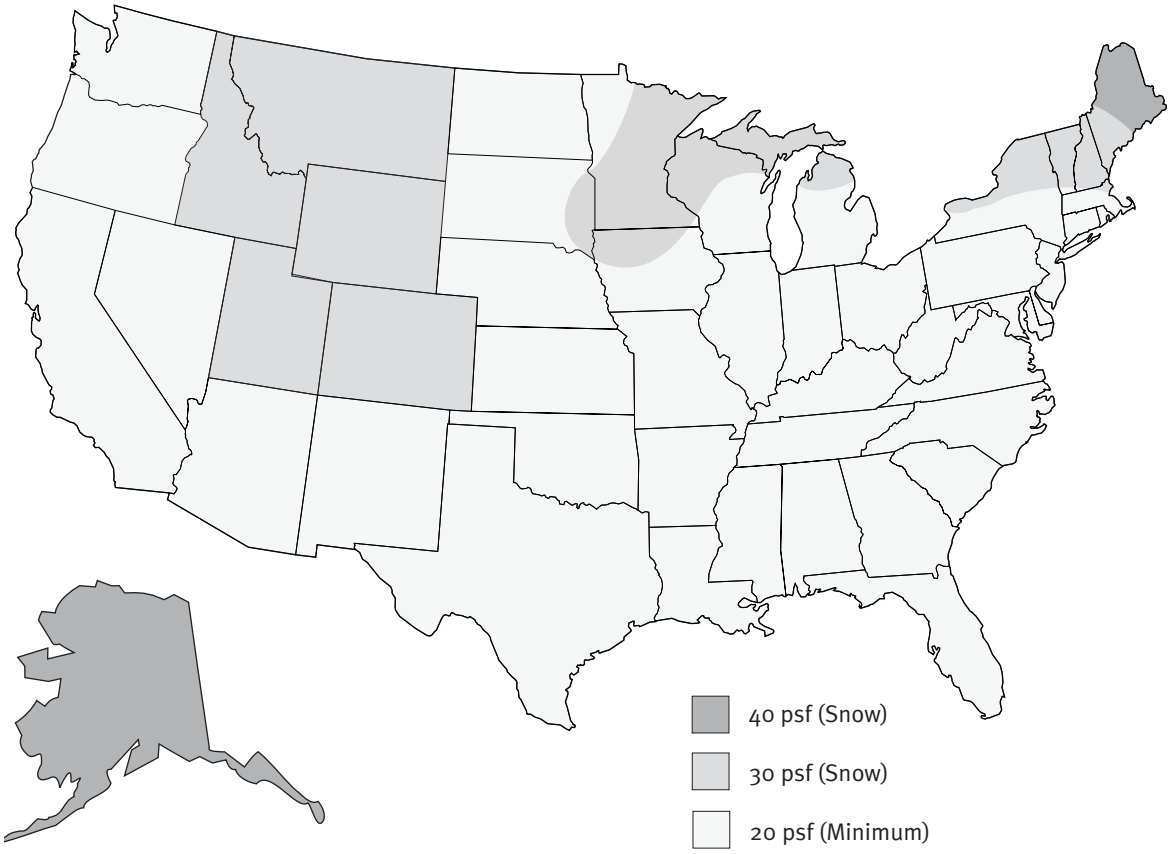

SOURCE: *PART 3280 Manufactured Home Construction and Safety Standards and Interpretative Bulletins to the Standards, Code of Federal Regulations,* HUD, 1999.

Figure 2.7 Roof Load Zone Map

Areas prone to termites

Termites represent a threat to wood buildings almost everywhere, although the problem is particularly acute in some areas of the southeastern states and Hawaii (see **Figure 2.8**). The use of steel, concrete, and pressure-treated lumber can minimize the damage caused by these pests. There are good termite shield designs that can be incorporated into most foundation systems in areas of especially high infestations of termites. Most shields are constructed from lengths of galvanized steel inserted between the concrete and wood portions of the foundation. The steel protrudes outward and downward, creating a barrier to termite mud tubes.

In termite-prone areas, the design and construction of the foundation system should ensure that there is no contact between untreated wood components of the foundation and the ground. Good workmanship would also entail cleaning up all wood scraps from the job site.

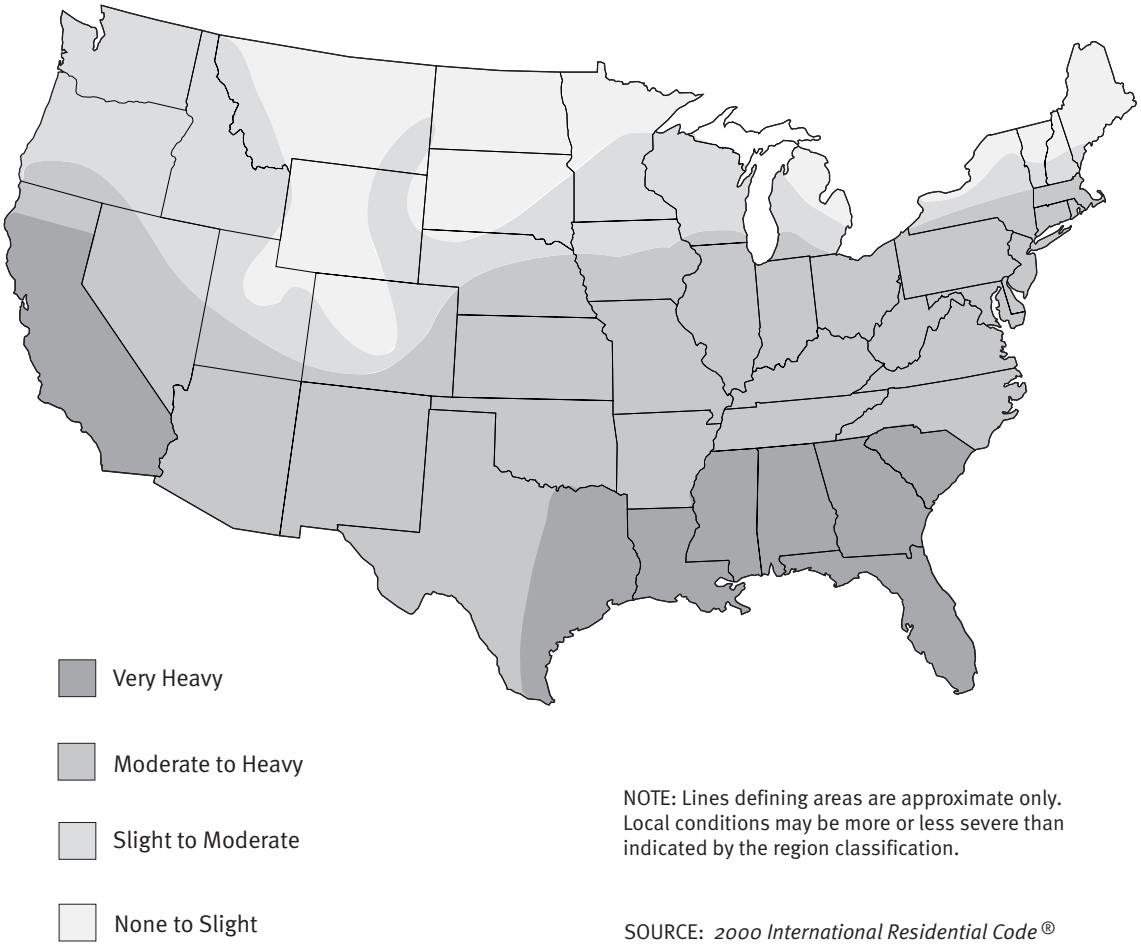

NOTE: Lines defining areas are approximate only. Local conditions may be more or less severe than indicated by the region classification.

SOURCE: *2000 International Residential Code®*

Figure 2.8 Termite Infestation Probability

Local, state, national requirements

As opposed to the HUD code, which is preemptive of local codes and creates uniformity of manufactured home construction across state lines, foundation systems are typically subject to state or local building codes. So, while the homes themselves may enjoy consistency of design and construction, foundation plans are subject to review by the local code enforcement authorities.

All of the non-proprietary systems described in this guide must be tailored to the site conditions. If local building department approval is required, the use of a local engineer to prepare plans for submission is prudent and may be required for HUD/FHA-insured financing. Proprietary systems almost always carry engineering approvals, but some building departments may not approve their design concepts. Consult with the proprietary foundation system manufacturer before planning to use a system in a particular jurisdiction.

2. MAJOR DESIGN FACTORS

Initial cost

Among the many factors that shape the selection of the foundation system, cost is one of—if not the most—important, especially for the sellers and buyers of modestly priced housing. Generally, discussions of cost focus on the initial home price. While the purchase price is only part of the total cost equation—maintenance and upkeep being the other major considerations—it is the part that can be quantified pre-purchase. Price is in many cases the determining factor in choosing a foundation system, and this guide compares foundation systems in terms of the relative first cost.

Among the foundation systems reviewed in this guide there is considerable variation in cost, with pier and anchor systems among the least costly and basements the most expensive. Price is predicated on local site conditions and design parameters, such as in the case of seismic and flood hazard areas where design constraints generally increase the cost of all foundation systems. Other factors, such as amenity, aesthetics and desire to qualify for real property financing, are variables that may compete with or override the desire to select a low-cost foundation.

Real property foundation classification

Be sure that the foundation system selected is one that is familiar and acceptable to construction and mortgage lenders. Before settling on a system that is intended to have a real property classification, it is always prudent to confer with area lenders as to the locally acceptable foundation systems (for more discussion of this topic, see Page 1.3).

Installation time

To speed construction time for foundation systems, it's smart to be aware of local design and construction practices. Using prefabricated components, such as precast concrete grade beams, manufactured structural panels, prefabricated steel stanchions, pony walls framed for the non-proprietary systems, or one of the proprietary systems described in Chapter 4, can significantly reduce installation time.

Simple installations can be done in one day, but the time required for more complex jobs can extend to a week or more. When planning the time needed for an installation, it may help to set up a schedule of tasks that are to take place before and after the home's arrival from the factory.

Compared with site building, where construction schedules are often subject to lengthy delays, the manufactured home delivery dates are usually accurate to within a day or so. Use this to work backwards and schedule preliminary site work and foundation construction. If possible, try to have all pre-delivery work done a day or so before the home arrives. Doing pre-delivery work any earlier could affect the cost of borrowed construction funds; any later could mean the house is in the way while the work is being finished. It is prudent to budget extra time for site work the first few times a new system is specified.

The home manufacturer can be a valuable resource in the foundation planning process. Developers and retailers who consistently get homes done on time do so because they plan their projects much like the home manufacturer plans for factory production. People working on a foundation or home installation should know the roles they are expected to perform, the time in which they are to do it, and the standards to which they are to perform.

In general, the proprietary systems will require less time, because the components are prefabricated/preassembled and generally require less work at the site. In budgeting foundation construction time, it is generally true that pier and anchor systems are the speediest, followed by crawl space systems, slabs-on-grade, and basements. Foundation systems that require a crane for moving the home on to the foundation, such as a basement, typically take longer and usually cost more to install.

Matching up to the manufacturer's floor/chassis system

Some of the foundation alternatives described in this guide require modifications to the floor and chassis system. While many manufacturers offer these variations in their regular option lists, some do not. It's wise to contact the manufacturer to make sure their floor and chassis can be adapted for use with the selected foundation.

For example, some basement designs work best with floors that are capable of clear spanning from the outside wall to the center line (mating wall). To allow for basements uncluttered by a forest of posts that may be required to support the traditional chassis rails, many manufacturers offer (usually at a cost premium) one of several types of integrated floor/chassis systems. These systems place the chassis in line with the floor system and move the structural support to the exterior wall where it bears directly on the foundation wall.

Other designs make use of direct fastening connections between the perimeter stemwall and the rim joists of the home's floor (see **Figure 2.9**). This system calls for recessing the steel chassis parts away from the edge of the floor joists. Additionally, all utility dropouts need to be clear of this contact zone between the foundation sill and the floor joists.

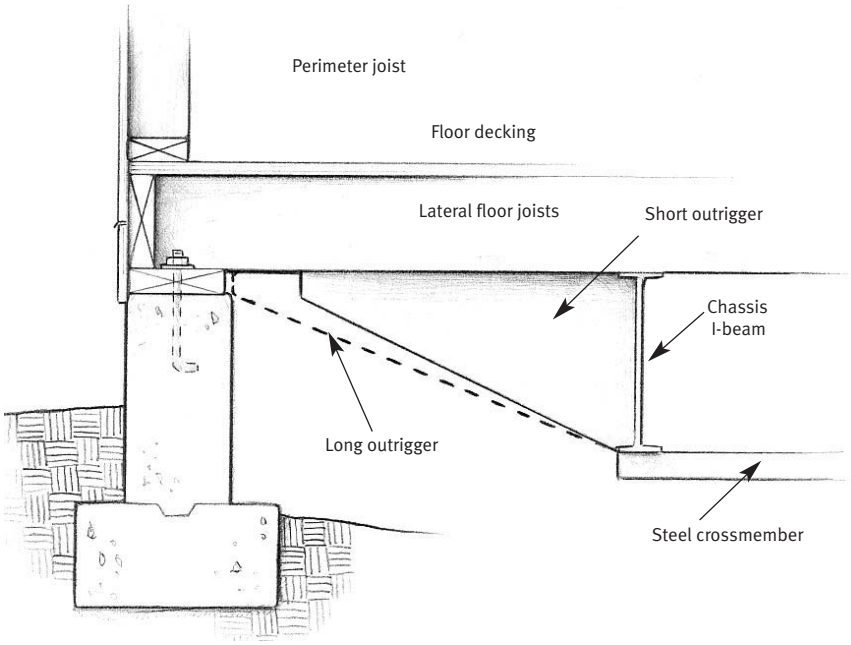

Figure 2.9 Recessing the outrigger to avoid interfering with the foundation wall.

For all of the foundation systems presented in this guide, there are numerous ways the homes are actually attached to their foundations, and ultimately to the ground. Direct bolting and nailing are very common. If a steel-to-steel connection is involved, welding is optimal. Coordinate the design of the connection with the manufacturer.

3. BEST DESIGN PRACTICES

Ventilating crawl spaces

Most manufactured homes, except for those placed over basements, have areas under the home and above the ground that in most cases should be ventilated. The primary purpose of crawl space ventilation is to minimize the accumulation of moisture under the home. Excessive moisture accumulation under any home can create an ideal

environment for moisture seepage into the home itself. The manufacturer's installation instructions spell out the amount of open vent area that must be provided per square foot of home (see **Figure 2.10**). Further, most instructions require even distribution of the vents, and allowance for cross ventilation.

A notable exception is insulated crawl spaces under homes of the type described on page 2.4. Such crawl spaces should have thermostatically controlled vents containing temperature-actuated devices that close during freezing periods.

Figure 2.10 Foundation wall detail showing an air vent.

Moisture barrier

A complimentary technique for minimizing moisture accumulation under the home is to place a continuous polyethylene sheet of at least 6-mil thickness on the ground below the home. The barrier blocks moisture in the ground from entering the crawl space (see **Figure 2.11**).

Figure 2.11 Polyethylene sheet for helping to keep moisture out of the crawl space.

Site drainage

Proper site drainage is also essential to prevent water from accumulating in the foundation area.

Grading is the most effective tool for keeping water away from a home. This can be achieved in two ways. First, if new lots are being created, the grading plan should elevate each home to promote water flow away from the home. This may not be an option if the home is placed on an existing lot. Second, once the home is in place, final grading, normally in the form of backfilling against the foundation wall, should slope away from the home for a distance of 3–5 ft (check local code requirements). To supplement proper grading, many builders add gutters and downspouts to remove rainwater from the roof and divert it a good distance from the foundation.

INDIVIDUAL FOUNDATION EVALUATIONS: NON-PROPRIETARY SYSTEMS

This section covers four foundation classifications:

- Pier and ground anchor support systems (the most popular method of securing manufactured homes to the ground)
- Crawl space systems
- Slab-on-grade foundation systems
- Basements

A non-proprietary system is considered to be "in the public domain"—usable by anyone without paying a royalty, fee, or other consideration for its use. It is not a product of manufacturing or individual company output. Non-proprietary systems can be constructed by any qualified contractor, using materials available from most building suppliers.

Included in each foundation class is a series of case studies drawn from actual installations and contributed by practitioners from across the nation. The case studies suggest how a basic concept can be modified to meet the specific needs of a site, home design, or buyer preference.

The properties of the non-proprietary foundation systems are summarized in a box as in the example below.

The $ symbols are intended to suggest the relative magnitude of initial system costs, not absolute dollar figures. Initial costs are ranked from least ($) to most ($$$$) costly. As with any rating method, individual designs may be exceptions to these relative placements.

The 🕘 symbols are intended to suggest the relative time required to install the foundation or support system, not absolute installation times. Installation costs are ranked from requiring the least amount of time (🕘) to the most amount of time (🕘🕘🕘) to install. As with any rating method, individual designs may be exceptions to these relative placements.

Non-proprietary

Type of foundation system:
Crawl space

Initial Cost:
$$ – $$$

Real property foundation:
Yes

Installation time:
🕘🕘

Use in seismic areas:
Yes

Use in flood hazard areas:
Yes

Use in areas subject to frost heave:
Yes

Pier and Ground Anchor Support Systems

DESCRIPTION

The pier and ground anchor foundation system has long been the common and accepted manufactured home support and anchorage system. It adapts easily to local site conditions, does not require a great deal of dimensional precision, and goes into place quickly. In the most frequently used configuration, piers are installed under the main beams of the home sections, under the mating line of multi-section homes and at other points designated by the home manufacturer (see **Figures 3.1** and **3.2**). Perimeter piers or blocks may also be a part of the home's support system.

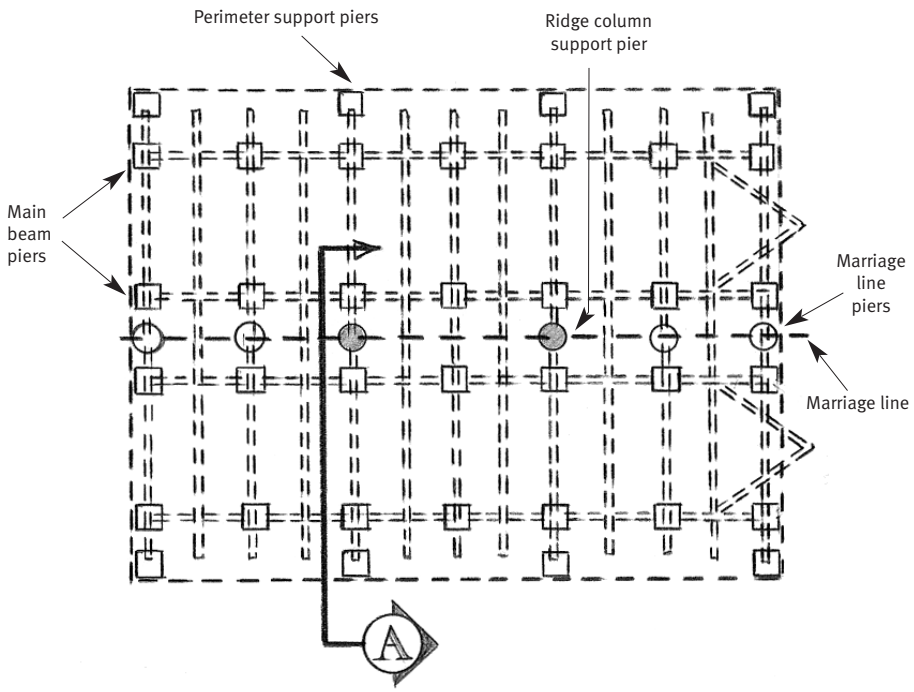

Figure 3.1 Pier and anchor foundation components.

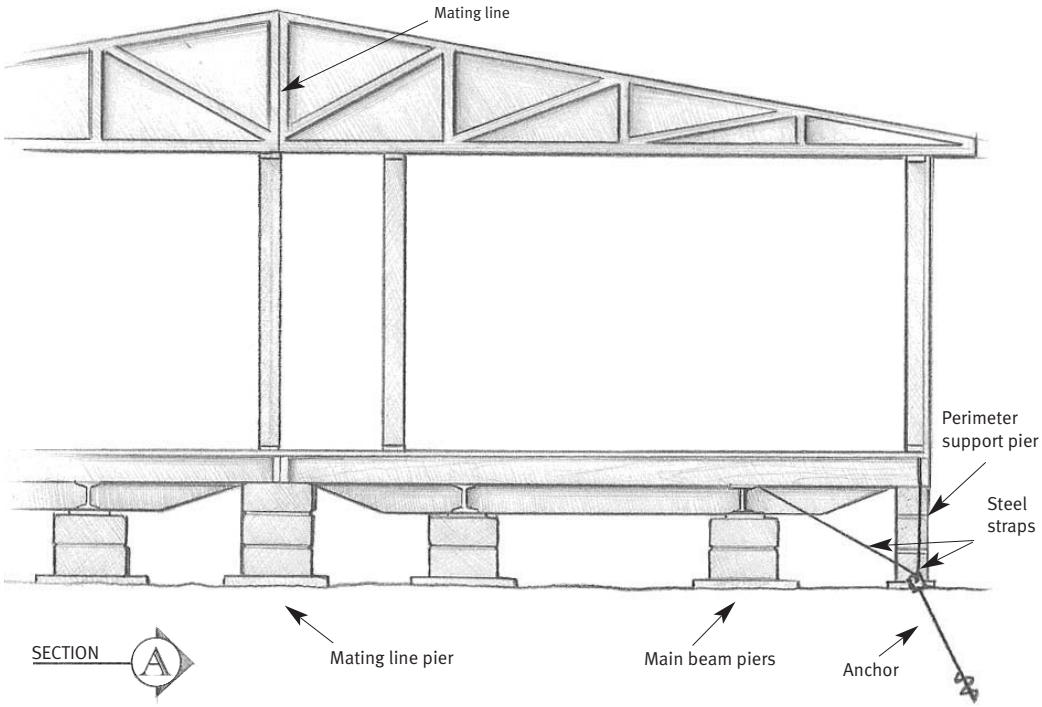

Figure 3.2 Cross section of pier and anchor foundation.

The most common pier types are steel jack stands or hollow core concrete masonry blocks with open cells placed vertically and stacked one on top of the other to the required height (see **Figure 3.3**). These can be single stacks of blocks or double stacks, laid in an interlocking configuration. Concrete block piers more than 36 in. high should be configured as double block piers. Piers more than 80 in. high should be designed by a registered engineer.

Another pier type is the pyramid-shaped open frame, steel type with a support plate on top of an adjustable rod at the apex (see **Figure 3.4**). The steel pyramids come in several heights and support prescribed/rated load capacities based on manufacturer's testing. The pier height and building weight dictate the allowable spacing between the piers.

Piers set on square footers or pads on the ground spread the load from a pier over a larger area, making a more stable base. The square pad footers may be concrete, either poured in place or precast, preservative-treated wood, acrylonitrile butadiene styrene (ABS), or other materials approved by the local building authority. The spacing of the piers and the allowable bearing capacity of the soil determine the size of the footer or pad. The piers are typically spaced from 5 to 10 ft apart depending on home design, local soil characteristics, and roof snow load.

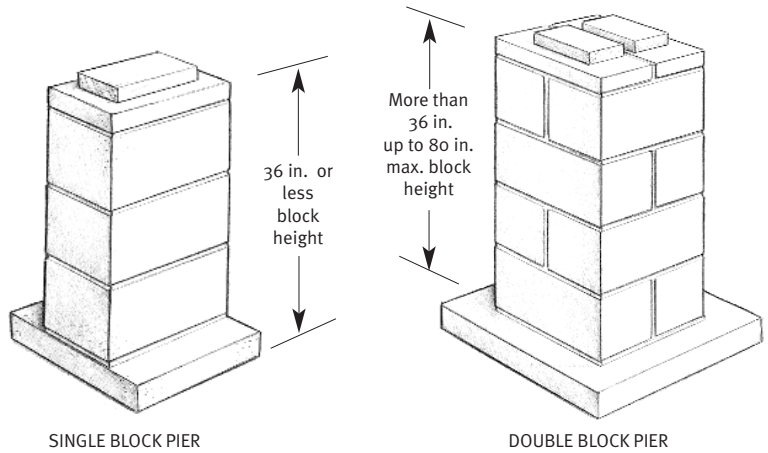

Figure 3.3 Common configuration of concrete block piers.

The allowable bearing capacity of the soil is a measure of its strength and ability to carry the weight of the pier without settling or compressing. Soil bearing capacity, measured by a penetrometer or other methods and expressed in units of pounds per square foot, is generally classified in the range of 1500–4500 psf soil (see Characteristics of major soil types on Page 2.2).

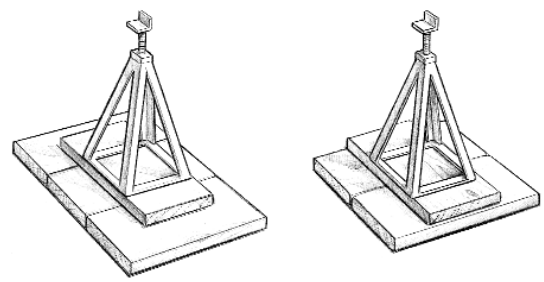

Figure 3.4 Metal piers on multiple footings.

Pads for piers should be set on compacted or undisturbed (not loosened by digging or plowing) soil. Organic or loose matter, such as weeds, trash, and other objects, must be cleared away, and then the area for the pad scraped until solid, undisturbed soil is exposed. If this is not done, uneven settlement can occur.

Auger-type (screw-in) ground anchors are the most common device for holding a home down and resisting wind uplift forces. The anchors are attached to the home frame I-beams by steel straps (see **Figure 3.5**). Manufacturers' manuals often recommend periodic checking of the straps from the home to the ground anchors to ensure that they are still tight.

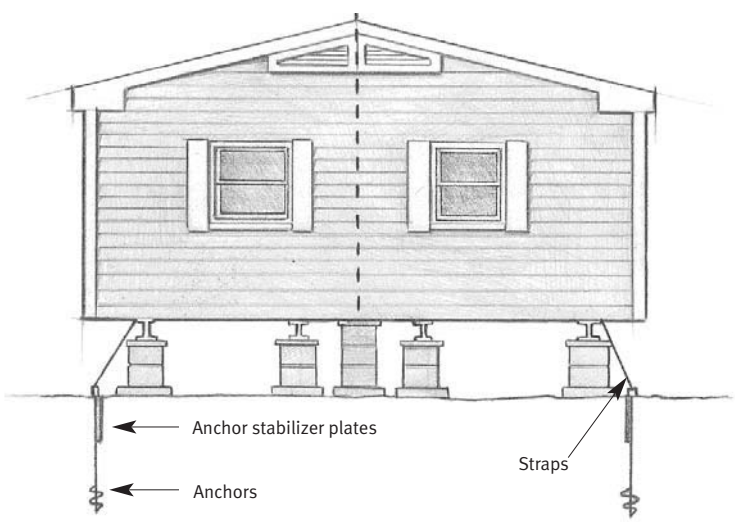

Figure 3.5 Steel straps wrap a home's chassis beams and are held in place by ground anchors. Stabilizer plates reduce movement of the anchor head.

Type of foundation system:
Pier and ground anchor support system

Initial Cost:
$

Real property foundation:
? (See page 3.5)

Installation time:
🕘

Use in seismic areas:
Yes

Use in flood hazard areas:
Yes

Use in areas subject to frost heave:
Yes

Non-proprietary

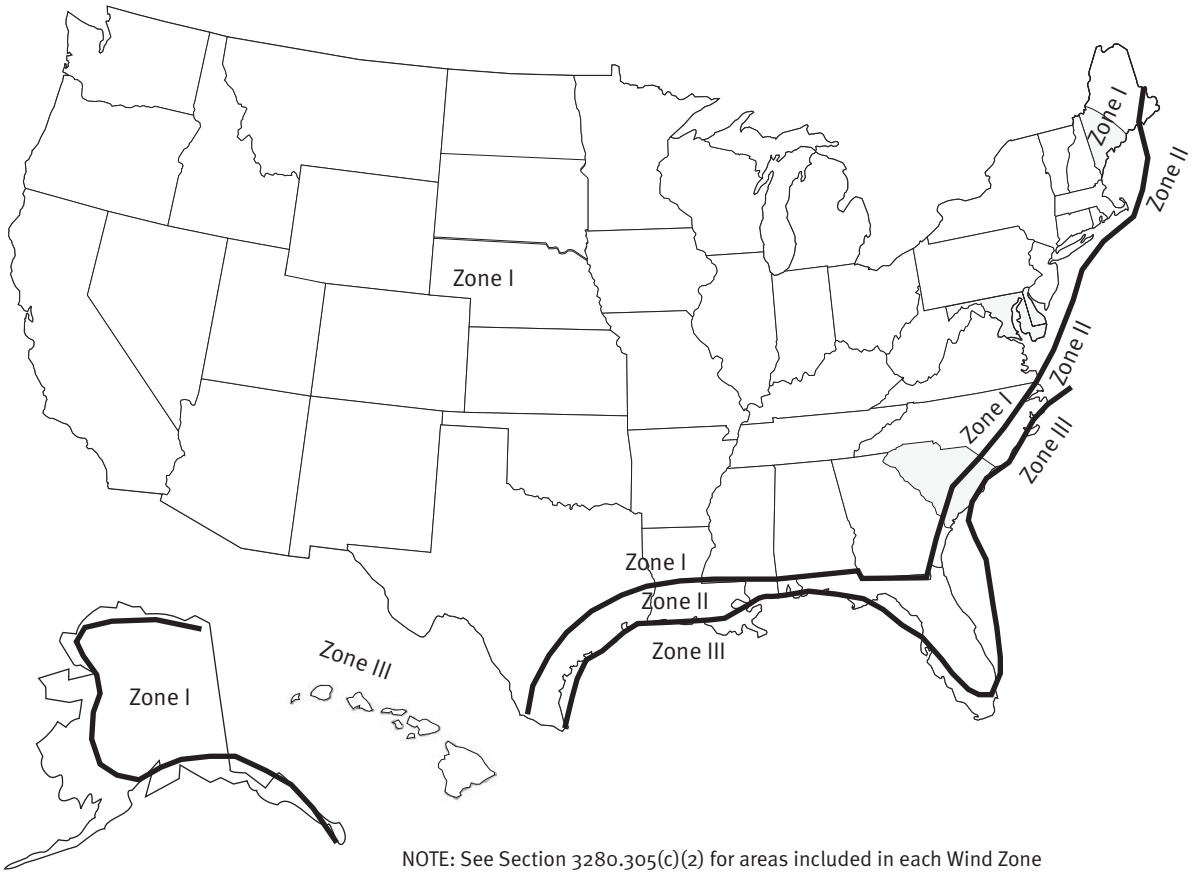

NOTE: See Section 3280.305(c)(2) for areas included in each Wind Zone

SOURCE: *Part 3280 Manufactured Home Construction and Safety Standards*, April 1999.

Figure 3.6 HUD Wind Zone Map

The spacing of the anchors and the strap is usually specified by the home manufacturer based on the size of the home and the wind zone. In all wind zones (see **Figure 3.6**), home manufacturers require tie down straps between I-beams and anchors. In HUD wind zones II and III, vertical straps from the sidewall of the home to ground anchors are required in conjunction with the straps from the I-beam to the ground anchor. In the absence of manufacturer recommendations or an engineering analysis based on soil capacity measurements, the MHRA Maximum Anchor Spacing Selector chart (see **Figure 3.7**) is a handy tool for selecting and designing a system.

Stabilizer plates, when used in conjunction with ground anchors, reduce the movement of the anchor head and therefore improve the overall structural performance of a system (see **Figure 3.5**).

Maximum Anchor Spacing Selector

MHI Manufactured Housing Institute — MHRA Manufactured Housing Research Alliance

			Wind Zone I				Wind Zone II				Wind Zone III			
			Single Section		Double Section		Single Section		Double Section		Single Section		Double Section	
		Anchor Length	36" or 36"	48" or 60"	36" or 36"	48" or 60"	48"	48" or 60"	48"	48" or 60"	48"	48" or 60"	48"	48" or 60"
		Stabilizer Plate Width	12"	17"	12"	17"	12"	17"	12"	17"	12"	17"	12"	17"
		Working Load (lbs.)	2000	3150	2000	3150	2500	3150	2500	3150	2500	3150	2500	3150
A Section/Floor Width	B Main I-Beam Spacing	C Pier Height	D Maximum Anchor Spacing (Feet)											
Less than 13'	Less than 88	Less than 25"	7.0	11.5	8.5	13.5	5.0	6.5	5.0	6.5	4.0	5.5	4.0	5.5
		25" to 39"	5.5	9.0	6.5	10.0	4.0	5.0	4.0	5.0	◆	4.0	◆	4.0
		40" to 48"	4.5	7.0	4.5	7.5	◆	4.0	◆	4.0	◆	◆	◆	◆
	88" and above	Less than 25"	5.5	9.0	6.5	10.5	4.0	5.0	4.0	5.0	◆	4.0	◆	4.0
		25" to 39"	4.0	6.5	4.5	7.5	◆	◆	◆	◆	◆	◆	◆	◆
		40" to 48"	3.0	5.0	3.5	5.5	◆	◆	◆	◆	◆	◆	◆	◆
13' to 15'	Less than 88"	Less than 25"	8.5	13.5	10.0	16.0	6.0	7.5	6.0	7.5	5.0	6.5	5.0	6.5
		25" to 39"	7.0	11.0	8.0	13.0	5.0	6.0	5.0	6.0	4.0	5.0	4.0	5.0
		40" to 48"	5.5	9.0	6.0	10.0	4.0	5.0	4.0	5.0	◆	4.0	◆	4.0
	88" and above	Less than 25"	7.5	12.0	9.0	14.5	5.5	6.5	5.5	6.5	4.5	5.5	4.5	5.5
		25" to 39"	6.0	9.5	7.0	11.0	4.0	5.0	4.0	5.0	◆	4.5	◆	4.5
		40" to 48"	4.5	7.5	5.0	8.0	◆	4.0	◆	4.0	◆	◆	◆	◆
15' to 17'	Less than 88"	Less than 25"	9.0	14.5	11.5	18.5	6.5	8.5	6.5	8.5	5.5	7.0	5.5	7.0
		25" to 39"	8.0	12.5	9.5	15.5	5.5	7.0	5.5	7.0	4.5	6.0	4.5	6.0
		40" to 48"	6.5	10.5	7.5	12.0	5.0	6.0	5.0	6.0	4.0	5.0	4.0	5.0
	88" and above	Less than 25"	8.5	13.5	11.0	17.0	6.0	8.0	6.0	8.0	5.0	6.5	5.0	6.5
		25" to 39"	7.0	11.5	8.5	14.0	5.0	6.5	5.0	6.5	4.0	5.5	4.0	5.5
		40" to 48"	6.0	9.5	6.5	10.5	4.0	5.5	4.0	5.5	◆	4.5	◆	4.5
More than 17'	Less than 88".	Less than 25"	9.0	14.0	12.5	20.0	7.0	8.5	7.0	8.5	5.5	7.0	5.5	7.0
		25" to 39"	8.5	13.5	10.5	17.0	6.0	8.0	6.0	8.0	5.0	6.5	5.0	6.5
		40" to 48"	7.5	12.0	8.5	13.5	5.5	7.0	5.5	7.0	4.5	5.5	4.5	5.5
	88" and above	Less than 25"	9.5	14.5	12.0	19.0	6.5	8.5	6.5	8.5	5.5	7.0	5.5	7.0
		25" to 39"	8.0	13.0	10.0	16.0	5.5	7.5	5.5	7.5	4.5	6.0	4.5	6.0
		40" to 48"	7.0	11.0	8.0	12.5	5.0	6.0	5.0	6.0	4.0	5.0	4.0	5.0

◆ This combination of factors may reduce the performance of the anchoring system. Separate engineering analysis is required.

Figure 3.7 Anchor spacing chart developed by MHRA.

COST OF CONSTRUCTION

The pier and ground anchor support system has the least initial cost for providing a support system for manufactured homes.

REAL PROPERTY CLASSIFICATION

In some instances, federal agencies do not consider pier and ground anchor support systems, as shown in **Figures 3.3**, **3.4**, and **3.5**, a real property foundation. The exceptions are cases where the anchors are held in place by means other than the soil alone, such as encasing the anchors in a concrete slab. These types of approaches are explored later in this chapter as part of the discussions of crawl spaces, basements, and slabs. The U.S. Department of Housing and Urban Development policy regarding the use of ground anchors with homes that qualify for FHA insurance for real property loans is currently under review.

INSTALLATION

The installation of a pier and ground anchor foundation system is frequently accomplished in one working day.

WIND LOAD RESISTANCE

Of the non-proprietary systems, the pier and anchor system is the one most often specified by manufacturer's installation instructions as an effective means to resist wind forces.

GRAVITY LOAD RESISTANCE

A pier and ground anchor foundation supports gravity loads (live and dead) adequately if it is designed to take into account the bearing strength of the soil, if the piers are properly spaced, and if there are appropriate perimeter piers installed as required by the home manufacturer and the authority having jurisdiction.

SEISMIC LOAD RESISTANCE

Since the HUD standards have no provisions for seismic resistance design, almost all manufactured housing, (and, therefore, most pier and anchor installations) is not designed specifically to withstand seismic loads. Calculations show, however, that a manufactured home capable of resisting the HUD code wind forces will slightly exceed the requirements meeting for the highest seismic forces in the model building codes.

FLOOD RESISTANCE

The foundation type is suitable for use in flood plain areas when FEMA-recommended[14] designs or designs meeting FEMA's performance criteria are used. FEMA suggests taking the following precautions when a home is located in a flood plain: the anchor system should be designed to resist uplift floatation, collapse, and lateral movement under saturated soil conditions; and the floor level should be set above the 100-year base flood elevation. Under no circumstances should the home be located in a floodway.

FROST PROTECTION

In areas where frost is a design issue, individual anchors and footers under the piers are extended below the frost line and bear on earth below that depth. As an alternative to running the footers below the frost line, holes for the footers may be dug to the frost depth and then backfilled to the surface with gravel or other material that will not retain moisture. Another option is to insulate the area around the crawl space. This would eliminate the need to run the anchors and footings below the frost depth.

[14] Federal Emergency Management Agency. September 1985. *Manufactured Home Installation in Flood Hazard Areas, FEMA 85.*

Crawl Space Systems

DESCRIPTION

The crawl space foundation system described here has two main distinguishing characteristics: it incorporates full perimeter wall support together with internal, independent support points; and the space itself is not habitable.[15] Within that very broad definition, there are many styles, designs, and ways to build crawl space foundation systems. This section describes one design that has worked effectively with manufactured homes. Crawl space foundation systems are intended for use where a traditional site-built foundation system is preferred and to qualify as real property. This foundation is less well suited for instances where economy, speed, or installation flexibility is paramount.

In the design shown in **Figure 3.8**, the perimeter foundation wall rests on an excavated footer. The wall itself may be constructed of one or more conventional building materials (such as poured concrete, concrete block, or treated wood). The entire perimeter of the manufactured home floor bears directly upon this wall. The chassis also is fully supported, but with relatively economical piers. The manufacturer-designated ridge beam support points are carried by economical piers or posts. The home's resistance to horizontal or uplift forces is achieved through attachment of the floor joists to the exterior foundation wall. No additional anchoring devices are used (see **Figure 3.8**).

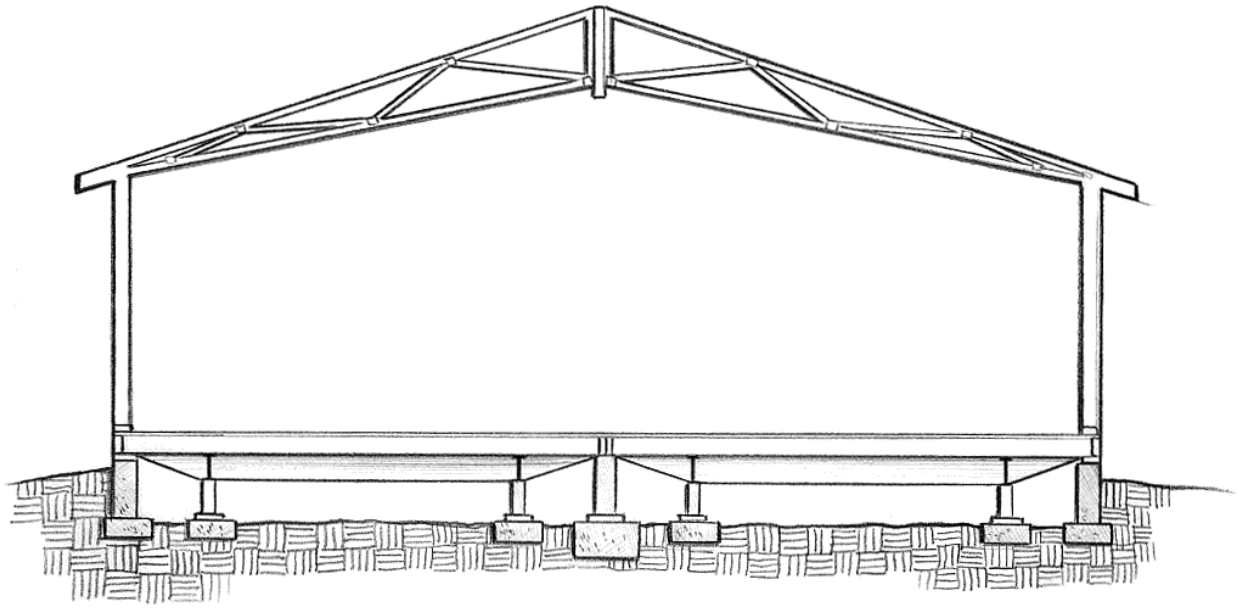

Figure 3.8 Crawl space foundation with full perimeter support, in low-profile configuration.

This foundation can be used on sloping lots (see **Figure 3.9**) and for recessed "low profile" installations (see **Figure 3.10**). In the latter case, the structural walls form a barrier to the entry of water underneath the home and act as a short retaining wall. The low profile design, providing a site-built "look," is much more difficult to achieve with a traditional anchor set or slab foundation (see **Figure 3.11**).

Access to the crawl space for utility hookups and repairs must be considered. This is potentially problematic in a low-profile installation. One solution is for the manufacturer to install an access panel in an appropriate location, such as a closet floor.

Figure 3.9 Stepped foundation.

[15] Some crawl space designs use only the interior piers for supporting the homes (see crawl space case studies).

Figure 3.10 A crawl space foundation system with full perimeter support, ready for home installation.

Figure 3.11 The low profile crawl space foundation system provides more of a site-built appearance.

CONSTRUCTION

Crawl space foundation systems require more care and precision than conventional anchor systems. The exterior wall of the foundation should not exceed the dimensions of the manufactured home's perimeter floor joists (not including the thickness of any exterior siding or sheathing). After staking the site, excavation to the depth of the footing is done with a backhoe (see **Figure 3.12**). Interior footings may be individually dug with a power soil auger (see **Figure 3.13**) or poured as a grade beam. Some variations of this system allow placing interior piers on crushed rock.

Figure 3.12 Excavating for perimeter footings with a backhoe.

Figure 3.13 Digging chassis support footers with a power auger.

As forms are constructed, they are double checked to make sure they are level, dimensionally accurate, and square (see **Figure 3.14**). Reinforcing steel is set as required. Concrete is poured, tamped, and dressed (e.g., anchor bolts are carefully placed for the sill). Forms are stripped and the structure is again measured. The walls may also be constructed of mortared and grouted hollow core blocks, again with bolted sills. A third option is a concrete or block stemwall in combination with a wood-framed pony wall.

Pony walls are especially useful when a low-profile installation is neither possible nor desirable. They also afford the installer with a bit more dimensional tolerance when placing the home directly on the stemwall (see **Figure 3.15**).

A well thought out plan for setting anchor bolts will prevent trouble later when installing the home. Bolts should be carefully placed so that they will not coincide with the floor joists (see **Figure 3.16**). This is a matter of good planning and careful workmanship. Cutting off bolts or coring out the sill to allow for the bolt's washer and hex nut is not recommended. Interior support footers, both along the chassis and at the ridge beam columns, may be poured concrete or crushed rock (if locally approved).

Type of foundation system:
Crawl space

Initial Cost:
$$ – $$$

Real property foundation:
Yes

Installation time:
🕘🕘

Use in seismic areas:
Yes

Use in flood hazard areas:
Yes

Use in areas subject to frost heave:
Yes

Non-proprietary

Figure 3.14 Forms ready for concrete pour.

Figure 3.15 Pony wall construction method.

VENTILATION

Crawl space ventilation is provided through perimeter wall vent openings. Planning for vents varies, depending primarily on whether or not the home is being installed in a low-profile configuration.

INSTALLATION

Normally, the foundation—especially the low-profile version—is completed before the home arrives. The axles, tires, and hitches are removed, and the home is installed on the foundation by craning or rolling (see **Figures 3.17** and **3.18**). Once placed on the foundation sill or pony wall, the floor is brought to a level position. Interior piers are placed along the chassis beams and positioned at the designated ridge beam columns.

Figure 3.16 Carefully placed anchor bolts will not interfere with any portion of the manufactured home's floor joists.

Where an open endwall permits the truck to back the home inside the foundation, a home can be moved into position by the toter. Building the missing endwall then finishes the foundation.

Figure 3.17 Installing a home with a crane.

Figure 3.18 Installing a home with a roller system.

There are a number of options for constructing the interior piers that carry the chassis and ridge beam loads to the ground. The most economical is approved dimensional lumber, such as redwood or treated fir (see **Figure 3.19**). Also popular are non-grouted hollow-core concrete blocks and manufactured steel piers. Since these structural components only provide vertical support, they may be selected for economy and ease of installation.

Figure 3.19 Economical support posts for chassis and ridge beam columns. Only used in conjunction with a structural perimeter wall.

METHODS OF ATTACHMENT

The crawl space design allows attachment of the entire perimeter of the floor joist system to the foundation sill, the preferred and most economical approach. The connection is secured with engineer-approved nailing strips (or approved steel nailing plates), fastened according to an engineer's nailing schedule (see **Figures 3.20** to **3.22**). The strips may then be painted and left as a finished surface. If vinyl siding is to be applied over the sheathing, it is installed last.

Chassis piers may be placed and tightened to the chassis beam through compression, wedges nailed in place, spot welds, or a number of proprietary attachment devices.

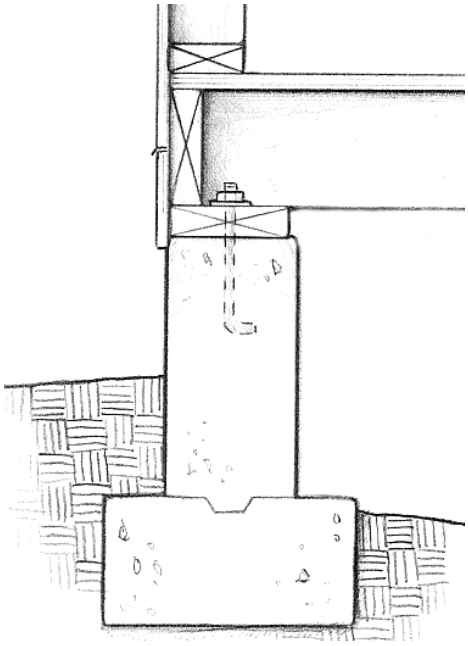

Figure 3.20 The manufactured home floor is secured to the foundation sill by a nailing strip. The material and the nail schedule must be designated by an engineer.

Figure 3.21 The dark horizontal area is the manufactured home floor joist, covered with the bottom board. The light wood is the foundation sill. A factory installed flashing is visible at the bottom edge of the exterior siding.

Figure 3.22 Nailing strip complete, ready for painting. When matching vertical siding is used, the joint is almost invisible from the street.

CONSTRUCTION CHALLENGES

Typically, a crawl space foundation is fully constructed before a home is installed. This presents a few challenges to the foundation contractor and home installer:

- The foundation must be precisely measured and constructed. Installers/builders are advised to consult with the home manufacturer to obtain the exact floor dimensions. There is less tolerance for error than if the foundation were intended for a site-built home.
- The manufacturer must provide a "foundation ready" floor-chassis system. This involves recessing all steel chassis components 8–10 in. from the edge of the floor joists.

- The home is normally moved onto the foundation with rollers (see **Figure 3.18**). If the site is not accessible from the street, a crane is used (see **Figure 3.17**). The use of a crane is often the method of choice for multiple installations.
- Often, the working conditions under the home are cramped and dark, because of the enclosed perimeter.
- When placing a home in a "low-profile" installation, planning for adequate slope in the home's drain line is important. If the home site and proximity are high enough above the street sewer, the drain line can be routed under the perimeter foundation footer; otherwise, a sleeve must be placed in the foundation wall to allow the drain to exit. Depending on the floor plan, the drain may need to be routed a substantial distance before it exits the foundation, creating potential problems with inadequate slope. Some manufacturers can supply "drops" through the floor and ship sufficient loose material to hang the drain line with proper slope.

COST

Crawl space foundation systems generally are more expensive than slabs and anchors, but less so than basement foundation systems. If carefully planned, savings gained in some parts of the system will pay for costs generated in other areas. For example, the cost of tie-downs (ground anchors) is eliminated in crawl space foundations, and piers used for the support of the chassis may be scaled back significantly. These savings partly offset the additional costs associated with building a perimeter wall that both supports and finishes the home.

REAL PROPERTY CLASSIFICATION

A crawl space foundation system using the perimeter load-bearing enclosure walls could be expected to meet the conditions for real property financing. With the structural perimeter wall, the home can be securely attached to the foundation to resist wind, gravity, and seismic forces.

INSTALLATION TIME

Installing a manufactured home on a perimeter wall crawl space foundation system is typically a two-step process, similar to an installation over a basement. First, the home is delivered alongside or near the foundation and uncoupled from the transporting truck. Next, the house is raised, the axles, wheels, and hitches are removed, and then it is rolled or craned onto the foundation. This is inherently slower than driving the home into its final setup position, as would be the case with an anchor and pier or slab system. A crew of three typically can construct the crawl space foundation system in three days before delivery and install and finish the home in five days after delivery (not including a garage or other ancillary structures).

WIND LOAD RESISTANCE

Although the areas where this system has been popular are not prone to hurricanes, crawl space systems offer effective resistance to the buffeting forces of high winds. The continuous fastening of the home's floor joists to a sill (i.e., anchored to a structural concrete wall and footing) provides good resistance to horizontal forces. Further, homes set in "low profile" offer less wall exposure to high winds, thus reducing the loads required to be resisted by the connections.

GRAVITY LOAD RESISTANCE

The perimeter load-bearing enclosure wall support system provides excellent gravity load resistance. The perimeter wall carries much of the roof load directly to the earth. The chassis main beams and piers carry only the interior floor loads. The perimeter enclosure wall supports the full perimeter of the home.

SEISMIC LOAD RESISTANCE

The perimeter load-bearing enclosure wall support system combined with a deep stemwall provides adequate seismic load resistance. The structural connection of the home to the perimeter foundation wall can be designed to effectively transfer the forces to the earth around the foundation. This system has been used effectively in the San Francisco Bay Area, one of the highest seismic risk zones in the nation.

FLOOD RESISTANCE

The low-profile version of the crawl space foundation system described here is not intended for use in flood plain areas. However, when FEMA-recommended designs are specified, crawl space system foundation systems are suitable for use in flood plains. Among the FEMA requirements are the following: the foundation system resists flotation, the floor level is set above the base flood elevation, and the home site is not in the floodway.

FROST HEAVE

As long as the footers reach below the maximum frost depth, crawl space foundation systems can be and have been used in any climate.

Case Study 1

Mt. Clemens, MI

Chateau Communities
6160 S. Syracuse
Englewood, CO 80111
(303) 874-3361 Tel.
(303) 874-7098 Fax

This Chateau Communities foundation resembles what many people visualize when they think of a traditional crawl space. It has been fine-tuned over the years by Chateau and is in widespread use in land-lease communities developed and owned by the company.

In 1984, when Chateau acquired the community at Mt. Clemens, Michigan, they took a hard look at the foundation used in the existing homes in the development. From those observations, they made innovations and developed the system shown in this case study. For example, as new homes were added to the community, the foundations were modified to incorporate a non-load-bearing concrete barrier wall designed to keep animals from burrowing under the homes.

The crawl space foundation is formed using conventional foundation materials, but forming of the 6–8 in. concrete perimeter wall requires a skilled crew. The area for the foundation is then excavated to slope from front to back, allowing for drainage to the existing storm sewer. The use of sump pumps has been discontinued because of high maintenance experienced by the developer. Chateau also installs gutters and downspouts on every home to provide positive drainage away from the home.

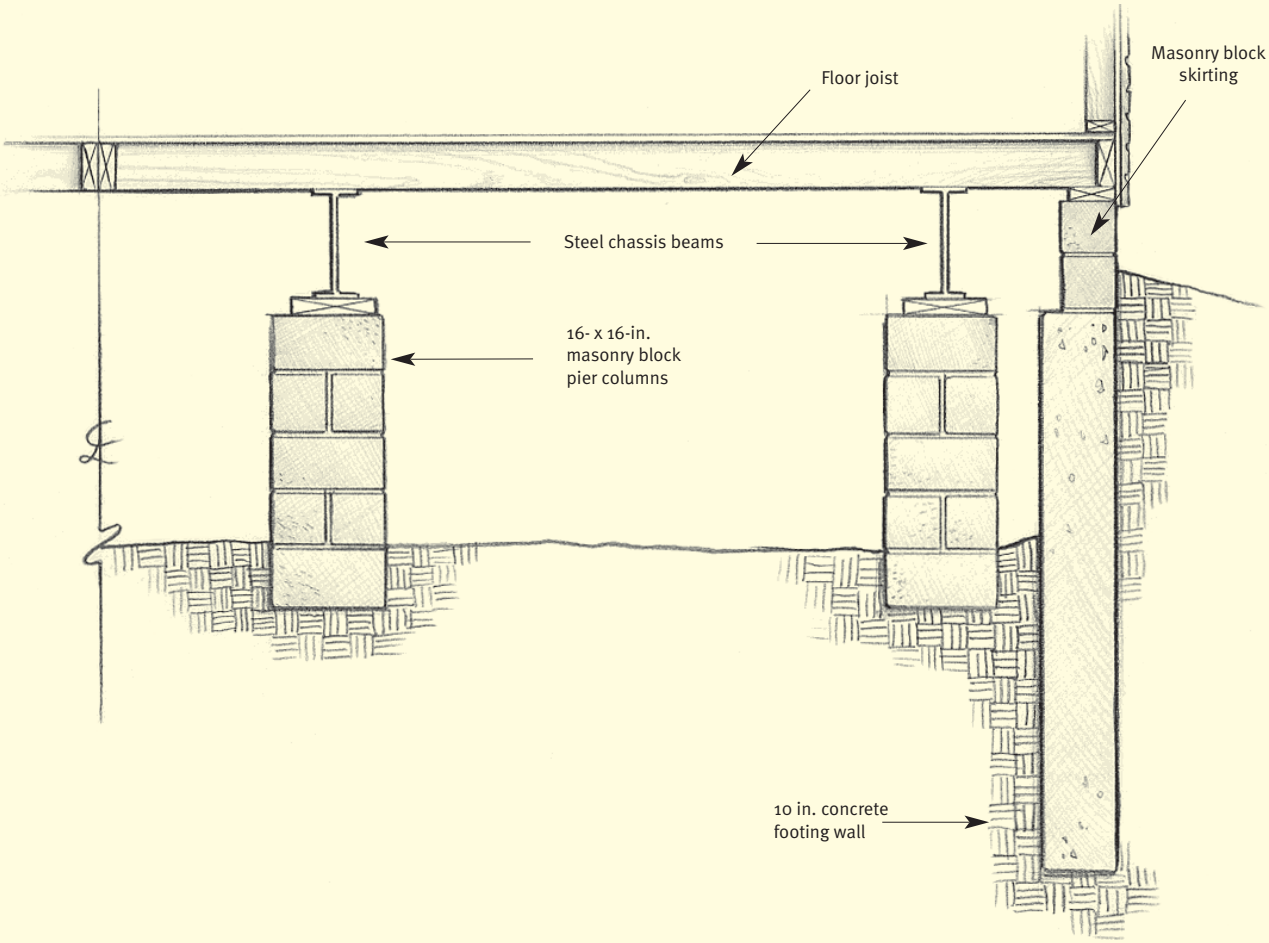

Figure 3.23 Cross section showing masonry pier supports and deep concrete perimeter wall.

The Chateau design allows for the "low profile" final appearance that is popular with buyers, many of whom are senior citizens preferring as few steps up into the home as possible.

Piers for chassis support were originally poured into augured ground holes bored 42 in. below grade. Subsequently, Chateau opted to set concrete blocks on grade instead of the deep augured piers. The use of fairly small piers and high dimensional tolerances requires close construction supervision. The I-beam pier spacing is set at 6 ft–8 in. and the centerline piers are sized and positioned according to the home manufacturer's instructions.

Figure 3.24 View of the Chateau foundation system from inside the crawl space.

Access in setting the home is unobstructed, one of the benefits of the low front wall. The driver backs the home over this wall and maneuvers it into position. There are no pre-constructed foundation components in the way. After the truck leaves, the installers go about their normal activities of lifting, mating, setting, and finishing each home.

The home is secured with ground anchors or, as recommended by the manufacturer, and skirting is installed over the exterior concrete wall. The home is set at-grade with provision made for installing ventilation openings.

The exterior walls of the homes do not bear on the foundation wall. Skirting can be one of a number of basic building materials—concrete, aluminum, fiberglass, or vinyl—or it can be a proprietary manufactured skirting. The skirting is used to close the gap between the bottom of the home and the top of the barrier wall.

Use of reinforcement in the concrete perimeter walls may allow them to become load-bearing with the use of anchor bolts to attach the home to the foundation, thus eliminating the need for ground anchors.

To reduce costs, estimated at $4,000 to $4,500, the reviewers recommended using 8 x 16 in. concrete blocks for the piers, as well as for the wall, with appropriate steel reinforcing.

Either increasing the size of the footings or decreasing the space between the piers would allow for higher roof loads and varying soil conditions. The foundation is frost-resistant because of the deep concrete wall at its perimeter extending below the local frost line. Although this case study does not meet the FHA's real property permanent foundation definition because it employs soil driven ground anchors, this is of no concern to Chateau, which does not convert their homes to real property. However, if budgets permit, it can be easily modified to meet the FHA definition.

This Chateau system is economical, as it does not require costly custom home modifications, such as a foundation-ready chassis, that in most cases would be a special order.

Case Study 2

Williamston, KY

Cherry Hill Homes
1300 N. Main St.
Williamstown, KY 41097-9437
1-800-844-0543 Tel.
(859) 823-2801 Fax

Cherry Hill's foundation system is designed as a shallow crawl space foundation with a perimeter footing extending below the frost line. Since the frost depth in Cherry Hill's market area is normally around 24 in., protection against heaving from frost is achieved with a moderate amount of backfill.

The system uses 16-in.-wide concrete footers with 16-in. transverse runners that are 8 in. deep and reinforced with rebar. The continuous footers are poured onto compacted soil, and the anchors are set into the concrete. Crushed rock is then placed into the open "cells" of the concrete (see **Figure 3.25**). Finally, the entire area is covered with a sheet of 6-mil polyethylene sheeting that serves as a ground moisture barrier.

Figure 3.25 Open cells filled with crushed rock.

Excellent drainage is created with the use of 4-in. perforated pipe that is placed adjacent to the perimeter of the foundation and then covered with crushed rock (see **Figure 3.26**). Ventilation for the crawl space is provided via thermostatically controlled vents placed in the foundation walls. The amount of vent area required is dictated by local building codes.

Delivery of a home is fairly easy because the flat concrete pad and crushed rock form a level surface over which the home can be maneuvered. The even surface and lack of obstructions facilitate making the small adjustments typically needed when mating the sections after the truck has left the site. Concrete is a superior support surface for the safe use of manual jacks and other tools necessary for spotting a home.

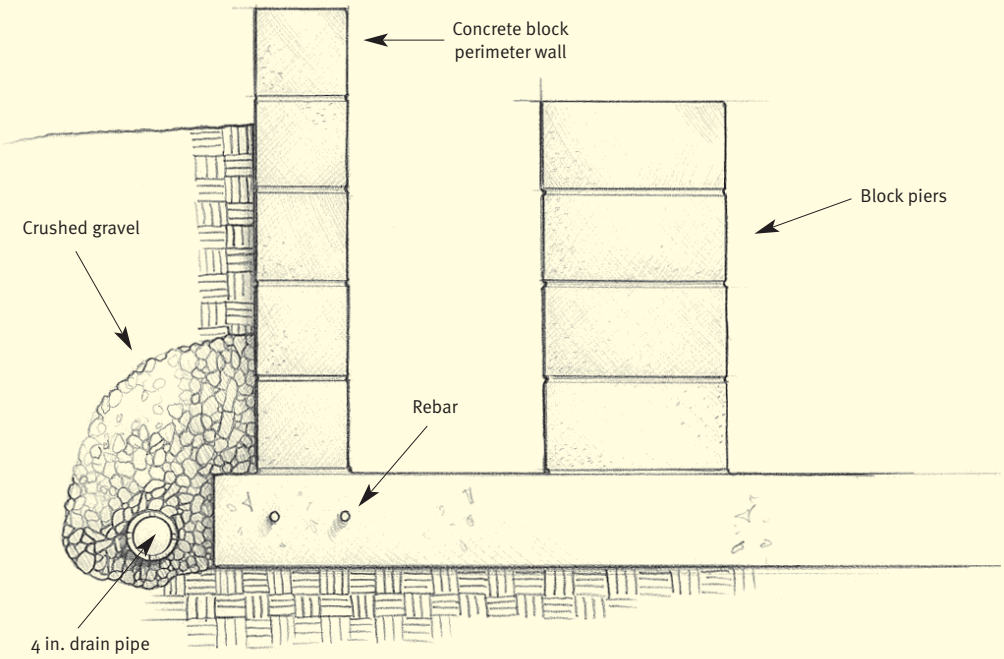

Figure 3.26

Once the home is in place, Cherry Hill installs ground anchors per the home manufacturer's instructions. The anchors are sunk into the concrete footers (see **Figure 3.27**). Chassis beams and the ridge beam column supports are rested upon dry, stacked hollow-core concrete blocks, each sitting on the concrete footer.

To enclose the perimeter, additional hollow-core concrete blocks are mortared into place. However, this wall is not designed to bear loads, except at specific points required by the manufacturer, such as at key window and door locations. Finally, soil is backfilled against the exterior block wall to a depth that will not only prevent freezing of water in the soil below the footers, but will also add aesthetically to the home by giving it a low-profile appearance (see **Figure 3.28**).

The backfill is graded away from the home to further prevent water from collecting under the home. Coupled with the perimeter drainpipe, this helps to ensure the crawl space remains dry.

Figure 3.27 Concrete block piers support the chassis I-beams. Anchors are encased in the concrete runners.

The Cherry Hill foundation is expected to meet FHA's definition for a permanent foundation. It is easily adapted for difficult site conditions, can be readily modified for sites with higher wind and roof loads, and, by extending the footing depth, can be used in areas that have deeper frost conditions. It is well anchored and provides for uniform, continuous support for the home. The design may also be cost-competitive with a full pour, uniform slab due to the reduced amount of concrete used.

Figure 3.28 Nearly finished foundation system showing access door and crawl space ventilation openings.

By using a series of cells that can be easily adjusted when forming and pouring the concrete, the design can be modified for larger and smaller homes. The interior concrete footers can be poured parallel with the long axis (and the chassis) of the home, rather than perpendicular to it. Depending upon the geometry of the home, this change may result in some cost savings. Aligning the footers with the chassis beams would also allow a slight amount of additional flexibility in pier placements.

By using a monolithic slab tying the foundation together, the Cherry Hill foundation can easily be classified as a floating slab. This would eliminate the need for backfilling and extending footers down below the frost line. However, such changes might keep the home from qualifying for FHA and other types of permanent financing.

Case Study 3

Longmont, CO

Ventana Development
10401 Oxford Road
Longmont, CO. 80504
(303) 684-9157 Tel.
(303) 684-9146 Fax

This Ventana wood-enclosed foundation sits on an 8- x 16-in. footer and is designed as a grade beam. The wooden perimeter wall is made up of two-by-four studs spaced 16 in. apart (doubled at the sides of doors and windows), covered on the outside with ¾-in. pressure treated plywood sheathing and a waterproof membrane. The I-beams of the home are supported on jack stands set on 16- x 16-in." concrete pads (see **Figure 3.29**).

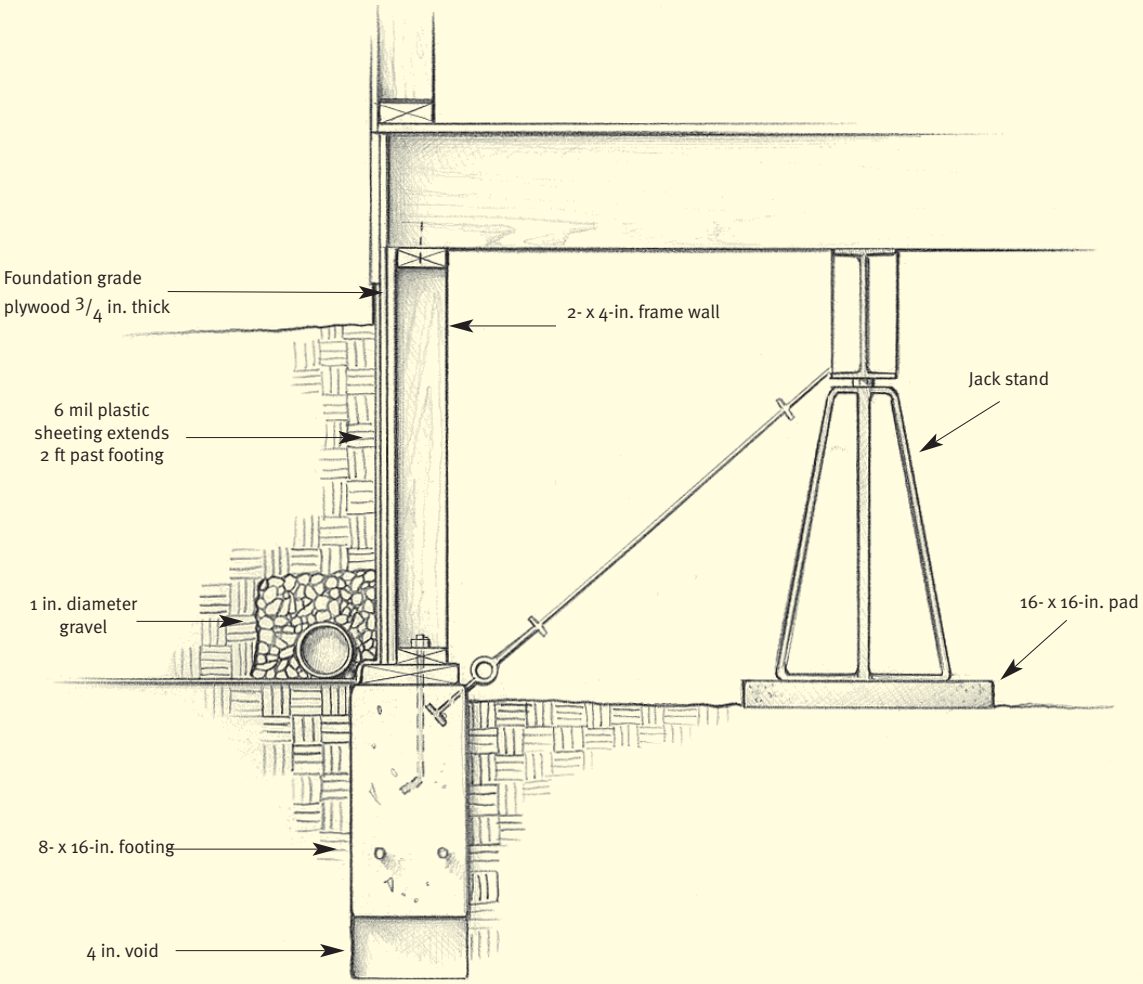

Figure 3.29 Cross section view of Ventana's crawl space design showing voids used in areas of expansive soils.

Because this system is designed for expansive soil, the engineer specified the "voids" at the bottom of the grade beam walls to concentrate the beam's weight on smaller portions of the expansive soils. This is needed because the lightweight construction characteristic of manufactured homes may otherwise be incapable of resisting heave forces that can reach 1,500 psf in expanding moist soil.

This foundation uses no forms the concrete is placed directly into a trench dug with a backhoe. Because of the many variations, including irregular finished surfaces in the finished concrete, the wood exterior walls are built after the home is in place (see **Figure 3.30**).

The Ventana foundation could be expected to meet FHA's definition of a permanent foundation and allows a house to be driven straight on to the foundation—a primary objective of the system's creator. The design of the footers and stemwalls allows for resistance to higher roof loads and local wind loads. As shown, it is suitable for frost depths of approximately 30 in. Deeper excavation and concrete placement would allow the system to accommodate more challenging roof and wind loads or deeper frost lines (see **Figure 3.31**).

Figure 3.30 Excavation of the ground prior to setting the foundation.

The foundation uses a ground-to-siding clearance of 12 in. instead of the minimum 6 to 8 in., thereby providing sufficient space to use operable vents in the foundation walls. The vents must be opened and closed at the appropriate times of the year. The use of a plastic sheeting moisture barrier on the ground could reduce the required ventilation from 1/150 of the floor area to 1/1500, cutting the number of vents needed. A French drain is used in this system to discharge any water that might accumulate under the home.

It is possible to create shear walls from the perimeter wall framing and sheathing. With a suitable fastening method, such as steel nailing plates that connect the framing and sheathing to the home's floor system, it is possible to eliminate the anchors into the footers.

The foundation walls are attached to the manufactured home floor assembly with nails. They can be connected to a rim joist or an interior joist. The primary purpose of this attachment is to give the walls added lateral resistance to caving in or collapsing from backfilled earth.

This design uses pressure-treated plywood—treated for ground-contact applications in accordance with the Uniform Building Code—to resist deterioration when buried in the earth. A cementatious panel board is specified for use on the above-grade portion of the perimeter walls to enhance the appearance of the home.

Figure 3.31 Framed stemwall sitting on concrete footer ready for siding.

The crawl space is accessed through an opening in the exterior wall of the foundation protected by a large window well. The position of the steel chassis must be kept in mind when choosing the location of the crawl space access.

In this development, the garages are all 4-wall structures abutting the homes, and built on thickened-edge slabs. The grade differential between the home and the garage is exactly 15-1/2 in. This permits two steps up into the house and adequate headroom at the doorway separating the garage and home.

Case Study 4

Campbellsville, KY

Goff's Fleetwood Homes
2093 New Columbia Road
Campbellsville, KY 42718
(270) 789-4092 Tel.
(270) 465-3453 Fax

Figure 3.32 This grid-like slab can be used to support homes in a range of sizes.

Goff's foundation design is a monolithic grade-beam footer that combines in a single-concrete base support for the chassis beams, the ridge beam columns, and the exterior wall. This foundation is a grid-like slab that omits portions of the concrete (see **Figure 3.32**) to cut costs without sacrificing structural integrity. The design offers a reliably solid structure that is flexible in the sense that it can be used with a variety of sizes and brands of manufactured homes without making small adjustments for floor widths or lengths. Further, it is a good example of a design improvement over individual pier footers and ground anchors at relatively little increase in cost.

Great care is taken to crown each site to encourage water to flow away from the home. In addition, a positive drain point is installed at the lowest portion of the foundation, channeling water away from the foundation. Goff will do a "low-profile" installation only where there is sufficient slope to the property to expose an opening in the foundation at the lowest corner for drainage. Any concrete blocks in contact with earth backfill are protected with a coat of basement-proofing asphalt.

Excavation is done without the need for forms, as the straight lines and relatively shallow depth (24 in. to the frost line) can be quickly dug with a backhoe (see **Figure 3.33**). The concrete footers extend below the frost line, giving the structure the ability to resist frost heave. The spacing between the lateral grade beams varies from 8 to 12 ft, depending upon the size of I-beams in the home's chassis. Goff installs anchor bolts along the outside edges of the foundation and at the centerline. Centerline anchors are not frequently used in the industry, but Goff includes them for the extra security and resistance to movement they can provide. Later, Goff attaches ground anchor heads to these bolts to hold the straps securing the home chassis.

This Goff design is expected to meet FHA's definition of a permanent foundation as long as the anchors are secured in the structural concrete rather than driven into the soil.

When a home is installed, it is rolled over the open foundation and mated together quickly. A relatively speedy installation is possible because working on a level concrete base allows faster and higher quality output than doing the same in a muddy, rolling field. Hollow-core concrete blocks support the chassis I-beams and the concentrated ridge beam loads that are located at the marriage line. Depending on the customer or installer's preference, steel jack stands with adjustable heads could be substituted for the concrete blocks.

The perimeter foundation wall, also built from blocks, extends to within ¼ in. of the floor assembly. If the exterior walls of the home sag, the perimeter foundation walls begin to carry some of the load. The final height of the home is adjusted, without cutting any brick or block, to match the height of the perimeter wall.

Typically this foundation can be constructed in five to six hours. It requires 12 to 18 yards of concrete. Labor and material costs range from $1,500 for a 1,150-sq ft home, to about $2,300 for a 1,680-sq ft design. This cost is justified, according to Goff, because this foundation reduces home servicing costs by 60%.

An advantage of this design is its simplicity and ability to be adapted to other site conditions. For example, if additional capacity for resisting wind or snow loads is needed, the amount and depth of concrete could be increased without adding complexity to the site preparation, foundation construction, or home installation. The amount of concrete can be decreased by adding earth backfill at the perimeter wall. Backfill against the perimeter wall establishes a drainage pattern required by most lenders, and allows a reduction in concrete depth. The footer depth for frost line is measured from the top of the backfill to the bottom of the grade beam.

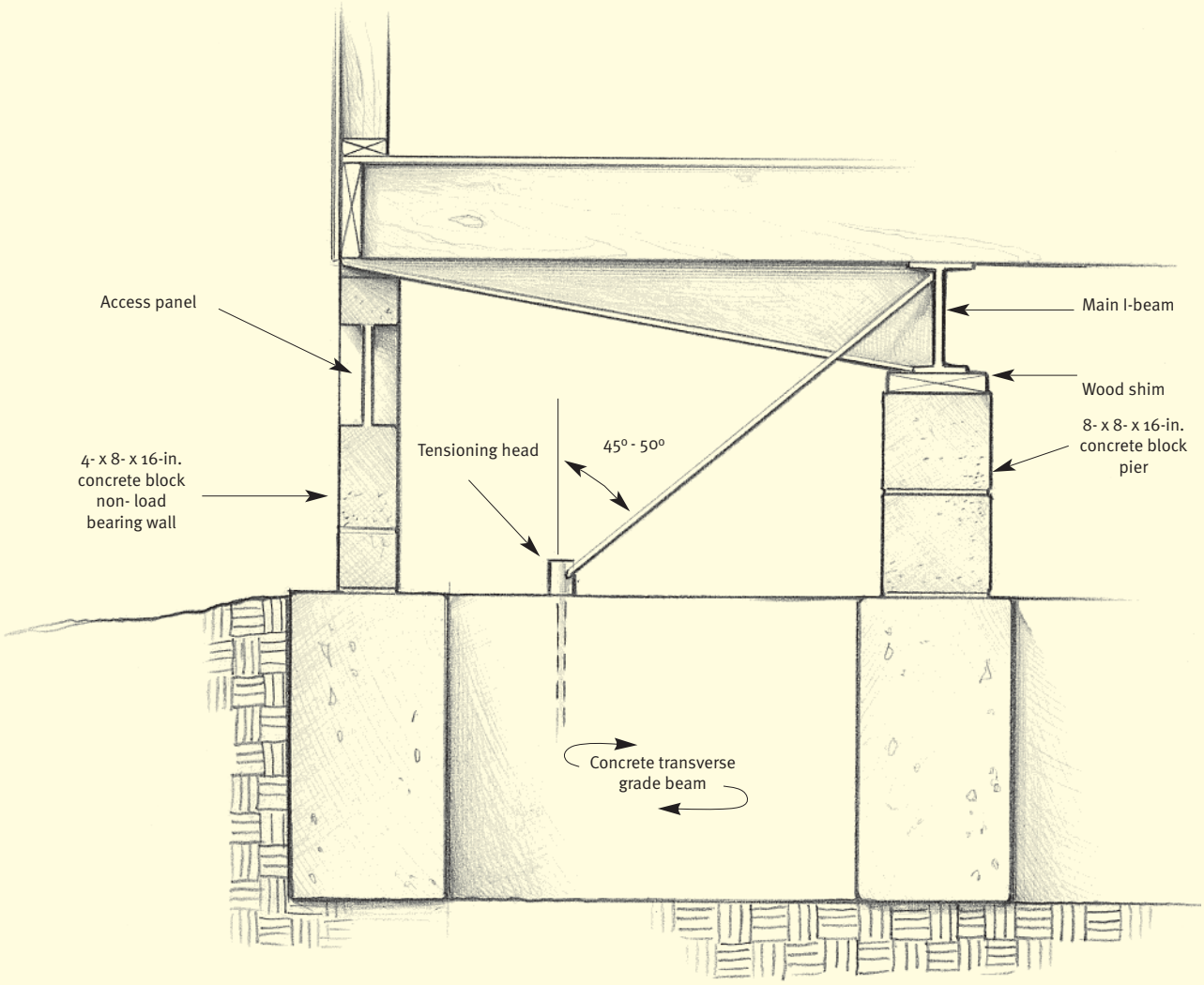

Figure 3.33 The Goff system combines a concrete slab with traditional anchors.

Case Study 5

Midwest

Midwest Retailer

This retailer's moderately expensive crawl space foundation design incorporates ribbon footers, a crawl space, ground anchors with tie-down straps and concrete block walls instead of isolated piers. The system uses a considerable number of concrete block walls for both interior and exterior support. These cross walls are laid out to support the chassis and marriage wall (see **Figure 3.34**).

For moisture control, the design calls for a polyethylene vapor retarder and pea gravel covering the ground lining the crawl space. Crawl space ventilation is controlled by thermostatically activated vents that open fully when interior or exterior temperatures exceed 70° F and close when temperatures drop below 40° F.

The 28-in. clearance between the bottom of the chassis and the grade below provides adequate space for the crossover ducts and easy access for servicing of any utilities. Entry to the crawl space is through a metal door in a sidewall of the foundation, created in a space formed by a large window well.

The ground anchors and galvanized diagonal strapping give the home its horizontal stability, because they widen the base of the home. While this design likely does not qualify under FHA's definition of a permanent foundation, it could conform if the anchors were set into the slab instead of the ground. With this change, the weight of the concrete adequately resists the wind load.

This design is well suited for excavated (low-profile) home installations where a full basement is not desired. The concrete block walls are mortared for strength and stability. The soil is then backfilled against the walls to create the impression that the home is only slightly elevated above the finish grade (see **Figure 3.35**).

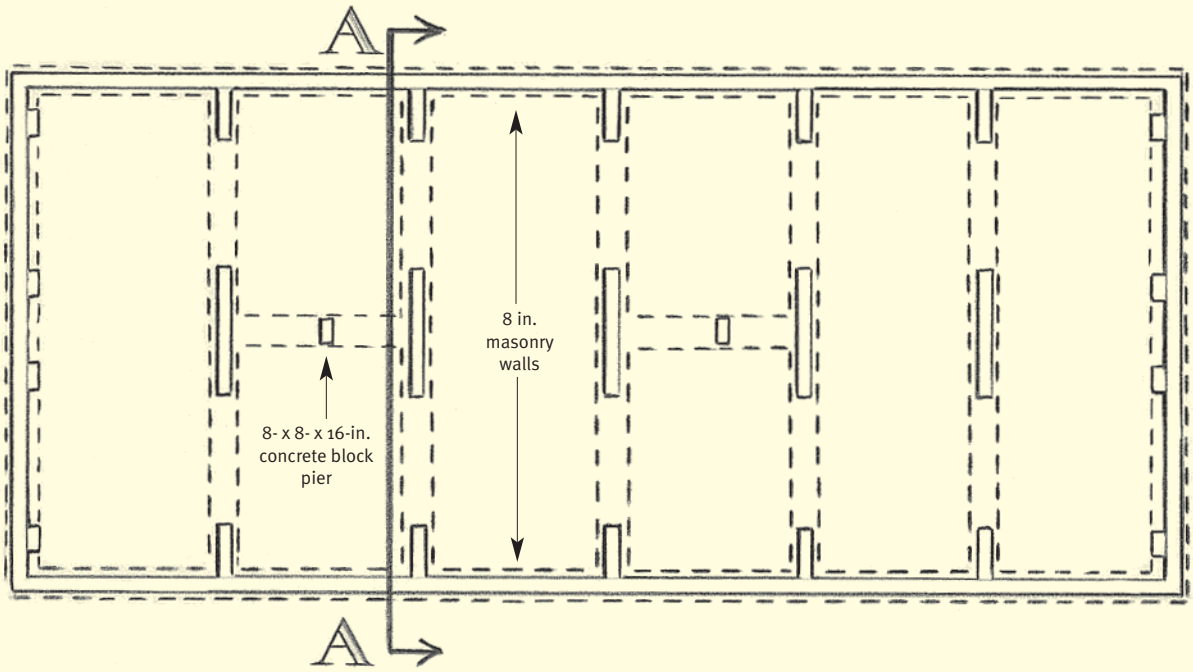

Figure 3.34 Plan view of foundation system showing both interior and exterior supports.

A crane or roll-on beam equipment is required to move the home over the deep crawl space and the pre-constructed internal concrete block walls that support the chassis beams and the ridge beam columns. While the use of a crane or roll-on beam does increase cost, constructing the foundation walls after the home has been placed would create difficult working conditions and make it harder to achieve quality workmanship.

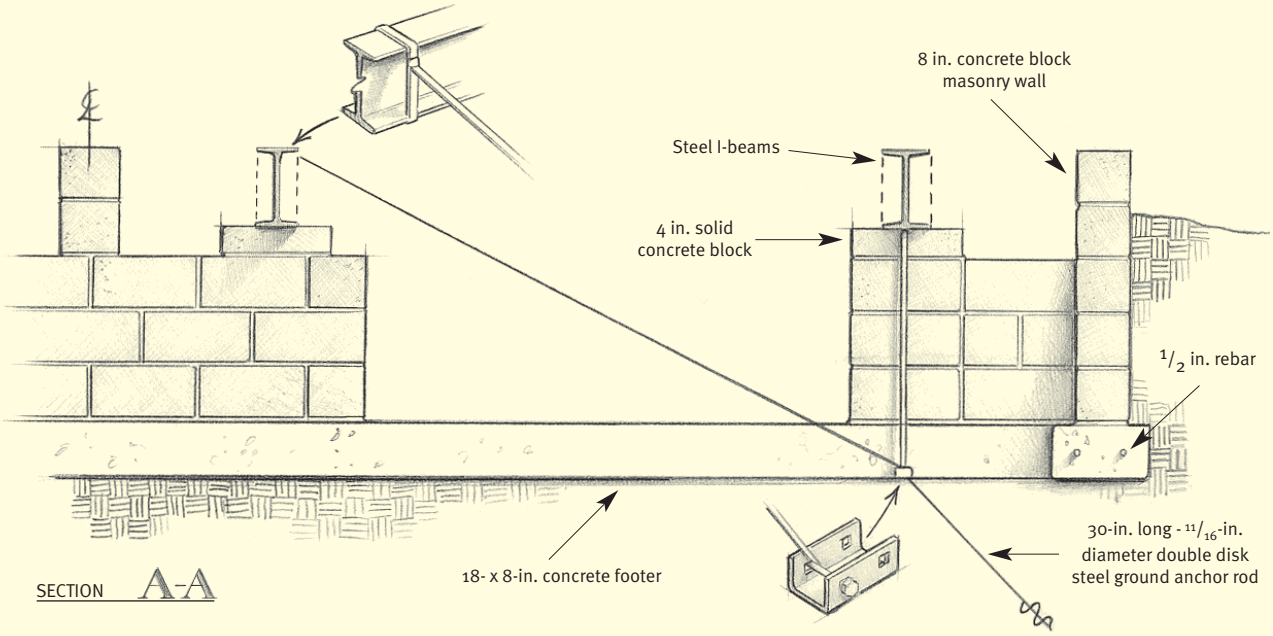

Figure 3.35 Cross section of foundation system showing earth berming and connection to ground anchors.

The exterior footings in this system are load-bearing. The home manufacturer designs the structure so that the exterior wall loads are transferred to the chassis, and from there through the piers to the ground. Lacking structural function, the perimeter walls are capped with steel termite shields instead of sills, and terminate an inch or two below the manufactured home floor. Insulation is placed into this gap and the surface is finished with matching siding extended down from the home.

In contrast to foundations where only the area for the footer is excavated, this design calls for excavation of the entire foundation area. Excavation costs can be substantial in areas where the frost line is quite deep.

The use of a generous amount of material that is well in excess of a structurally minimal design is deliberate on the retailer's part. From experience and intuition, the retailer feels the design yields an extra measure of support and durability. To this end, the design attends to the smallest details: for example, all-mortared joints in the block walls are finished by striking them with a steel-grooving tool. It may be possible to cost-optimize the design without degrading its performance by reducing some of the structure (using double-stack piers).

Case Study 6

Midwest

Midwest Retailer

This unreinforced concrete stemwall foundation, relatively expensive for a crawl space, is designed to support a home with a perimeter support-type chassis or an integrated floor system that requires support at the exterior walls and the mating line only. The installation of a home requires a crane or roll-on beam equipment.

Figure 3.36 This foundation system is designed to carry the weight of the home at the perimeter and mating walls.

This crawl space foundation was originally designed for use with modular homes, but its advantages can be applicable to HUD-code homes. In places where integrated floor systems are popular, including the Midwest and northeastern states, this foundation should be considered. It also is appropriate for HUD-code homes built on a chassis that require support at the perimeter. Such chassis have large cross members that can span 14 ft or more, and steel sections that must rest on perimeter walls and centerline columns.

When the retailer installs a modular home on this foundation, 2-in. rigid foam sheeting insulates the inside of each foundation wall. Since HUD-code homes have fully insulated floors, this step is not necessary.

In plan view this system shows a row of regularly spaced block piers resting on a continuous 18-in.-wide by 8-in.-deep footer. This is the normal method of supporting a modular home at the mating wall, but it needs some adjustments for a HUD-code home. Additional piers would be required at specific points along the mating wall for the ridge beam columns.

The system provides excellent support where the building loads are concentrated; it features good under-floor ventilation, and it offers good clearance under a home for utility installation and service. The retailer's plans indicate a foundation wall comprised of five courses of 8-in. concrete blocks, for a height of a little more than 40 in. This height could be reduced if allowable clearances were maintained under the home. This would take into account the combined floor/chassis thickness, the method of hanging and connecting the heat duct crossover, and other

utility/mechanical considerations. If no part of the manufactured home was suspended below the level of the sill plate, two or possibly three courses of concrete block could be eliminated. The number of required courses is likely to be controlled by the frost depth.

Access to the underside of any home with a raised floor is always desirable. The plans do not indicate a crawl space entry; however, an access door could easily be created in the foundation's sidewall, protected by a large window well. Alternatively, the home manufacturer could build-in access with an approved opening in the floor, normally in a closet or other out-of-the way location.

For moisture control, the design calls for a polyethylene vapor retarder and pea gravel covering the ground lining the crawl space. Crawl space ventilation is controlled by thermostatically activated vents that open fully when interior or exterior temperatures exceed 70° F and close when temperatures drop below 40° F.

The tops of the foundation walls are capped with a metal termite shield sandwiched between the concrete block wall and the 2- x 8-in. treated wood sill. The sills are secured to the foundation with ½- x 12 in. anchor bolts (see **Figure 3.37**). Anchor bolt spacing is not indicated, but should follow local building codes (typically 4 to 6 ft on center).

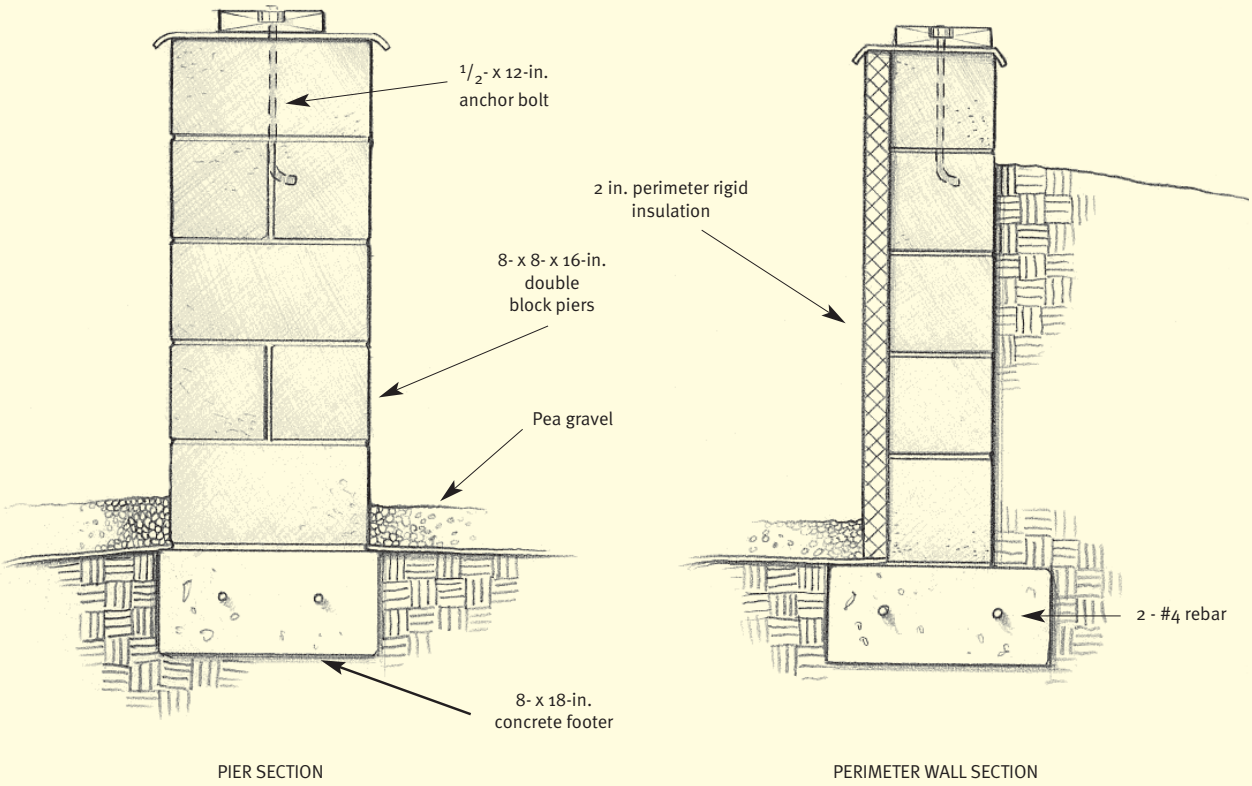

Figure 3.37 Cross section view showing perimeter and mating line supports for this recessed foundation system.

This foundation system could be adapted to support higher roof loads or wind loads by adjusting the footing size and including more reinforcement. This foundation system will likely meet FHA's definition of a permanent foundation. The frost depth is 4 ft, per local building code. For deeper frost lines, extending the trench for the perimeter footings to the required frost depth would be all that is needed. Steel reinforcing rods are specified for the footers, but not in the foundation's walls. Additional reinforcing could be added in the wall if local soil or seismic conditions warrant.

Case Study 7

Fond du Lac, WI

Asset Development Group (Steenberg)
8050 N. Port Washington Road
P.O. Box 170872
Milwaukee, WI 53217
(414) 352-9310 Tel.
(414) 352-6944 Fax

This design is a variation on the increasingly popular frost-protected shallow foundation system. The frost protection is achieved by placing a closed-cell, expanded-bead polystyrene rigid insulation board between the structure and the ground. This thermal barrier is intended to retain a sufficient amount of heat within the footprint of the foundation to prevent the soil underneath the footings from freezing. The concept has been used successfully in areas with deep frost depths where reductions in excavation and concrete can create significant cost savings.

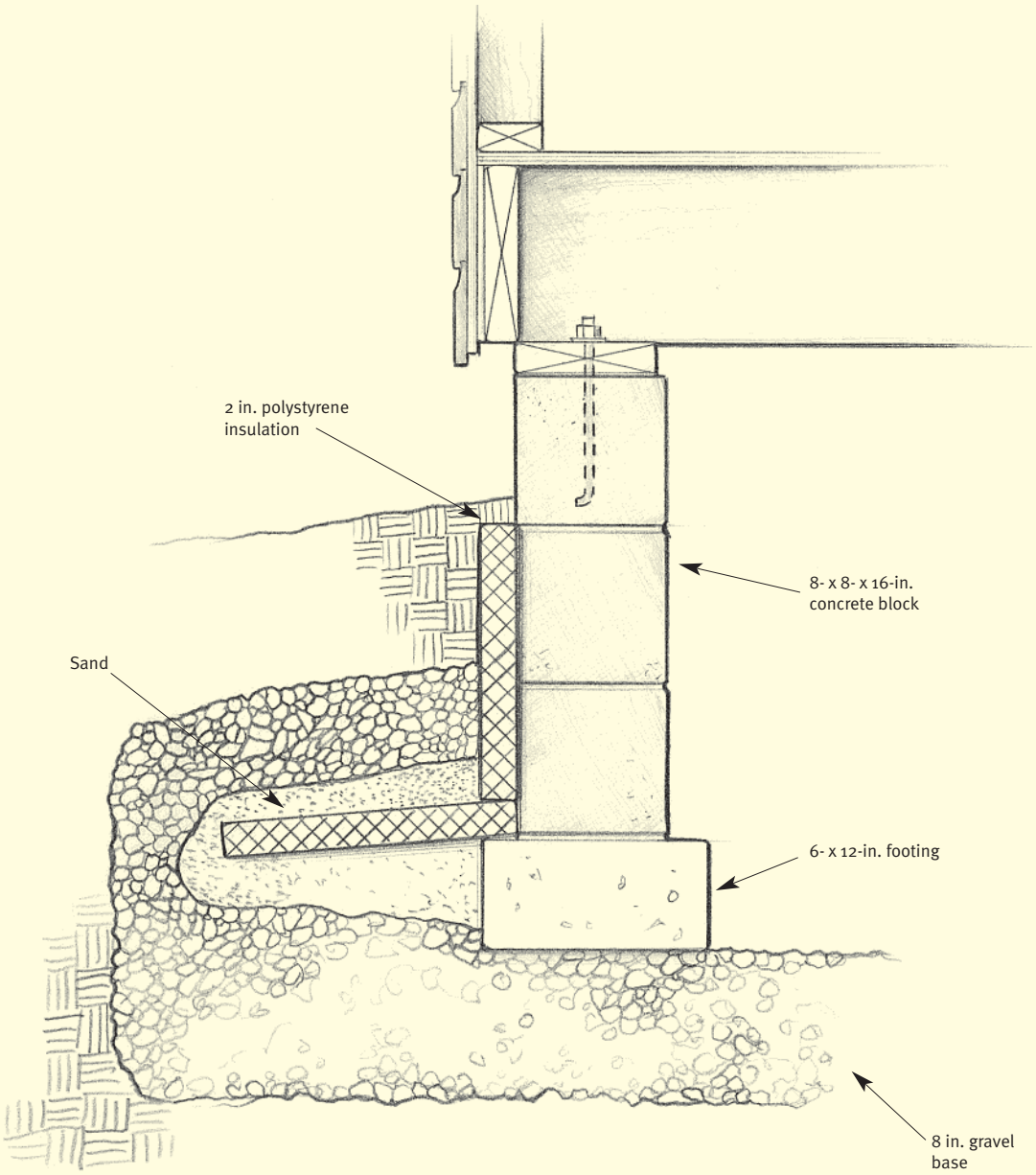

Figure 3.38 Insulation extends down the foundation wall and away from the home creating a "heat sink" under the home.

The foundation rests on mortared block walls set on 6- x 12-in. footings and an 8-in. deep gravel road base that extends 20 in. beyond the perimeter walls to allow moisture to drain away from the structure. The bottom of the footing is only 22 in. below exterior grade. The bottom of the crushed rock base is 30 in. below exterior grade. Without the gravel and polystyrene insulation, the footings would have to extend 26 in. deeper to meet the local frost depth (see **Figure 3.38**).

In most cases the blocks are mortared and filled with grout. Anchor-bolts are used to attach the foundation wall to the sill.

Spaced vent blocks in the exterior wall provide ventilation. One sq ft of vent area per 150 sq-ft of floor area should be adequate, unless a different ratio is spelled out in local regulations. Placing a standard door in the exterior wall is an easy way to provide access.

It may not be necessary for the home to overhang the outside wall by the minimum 2 in. shown in this design. In fact, if the floor were flush to the block wall, a number of more recognized attachment methods become feasible, such as a plywood, oriented strand board (OSB), or steel nailing plates—techniques of attachment that effectively transfer the loads from the home to the foundation.

This foundation lends itself to the use of standard methods for chassis and centerline support. Concrete block, wood posts, or prefabricated steel piers could all be used. With any of these support materials, the installer sets anchoring devices in the poured concrete, ideally ensuring that each such anchor is positively tied to a steel reinforcing rod or wire mesh.

This system does not place any unusual demands on the home installers, and no special or expensive equipment is needed. Inasmuch as a fair amount of work is done at grade level in the construction of the foundation, such as placing the polystyrene and extending the gravel base 20 in. beyond the outside of the footer, the site will be relatively flat; this allows the trucker to roll the home into position for the installers.

Although subject to verification, the design most likely meets FHA's definition of a permanent foundation. As with other crawl space foundations, it could be strengthened to support higher roof loads by increasing the size of the footings.

Although Asset Development Group has only placed two or three homes on this type of foundation, it is a clever concept to use a thermal barrier to trap latent heat below the home, thereby reducing the depth to which the surrounding soil will freeze. With further investigation and analysis it might be possible to develop optimal design solutions based on this approach, particularly for areas subject to deep frost penetration.

Case Study 8

Kansas City, MO

North Creek
CWS Communities Trust
Kansas City, MO

The crawl space foundation used at North Creek, a 234-site land-lease community in Kansas City developed by CWS Communities (now a subsidiary of Chateau Communities) is typical of many fee-simple developments. The design calls for a backfilled perimeter wall providing structural support to the home and satisfying the 36-in. frost depth requirement.

This foundation uses a steel-reinforced, poured concrete platform consisting of 12-in. thick footers along the perimeter and down the center of the home, and 41/2-in. thick runners for I-beam chassis support piers. The widths of the three longitudinal concrete runners are determined by the location of the chassis I-beams. An additional 8 in. is added to this width to assure that there is bearing for the pier even in cases where the chassis is not perfectly straight (see **Figure 3.39**). Thus, if the I-beam is located 30 in. from the perimeter, each outside runner will be 38 in. wide. Similarly, the center runner will be 76 in. wide.

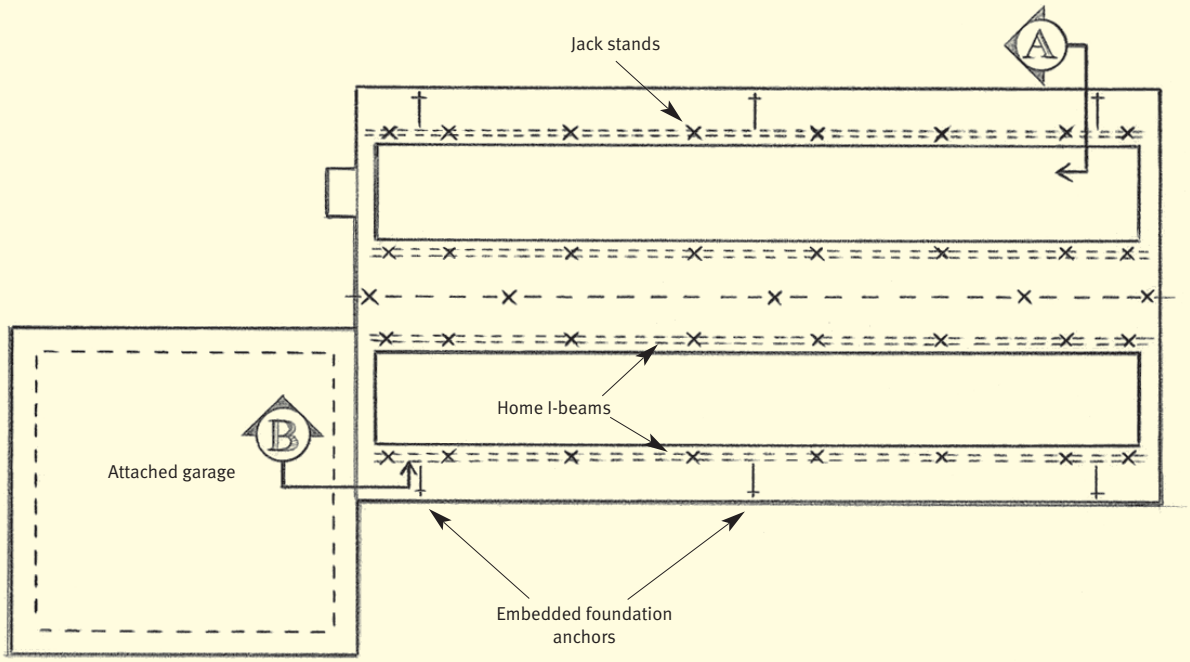

Figure 3.39 Plan view of the foundation system showing points of support for the chassis.

The primary vertical support for the home is provided with standard steel piers or dry-stacked concrete blocks. No special attachment method is used between the piers and the concrete, or between the piers and the bottom of the I-beam. Foundation anchors are embedded in the perimeter footer, and the steel straps generate resistance to horizontal movement (see **Figure 3.40**).

The perimeter wall for this system is primarily designed to resist lateral earth pressure. The perimeter wall also satisfies the manufacturer's requirement for perimeter support at certain locations. It is fastened to the perimeter joists of the home. This attachment method also creates a firmly braced structure against which earth may be backfilled. With 24 in. of backfill, the footer extends to a depth of 36 in., thereby ensuring against frost heave.

The base of the exterior wall is connected to the footer through the use of concrete anchor bolts set at 5-ft intervals. The entire wood perimeter wall, including 2- x 4-in. studs and ¾-in. plywood sheathing, is pressure-treated to the levels required for ground contact. The 8 in. of exposed perimeter wall is protected by adding a surface of cementitious paneling running from the bottom of the home rim joist and extending several inches into the ground.

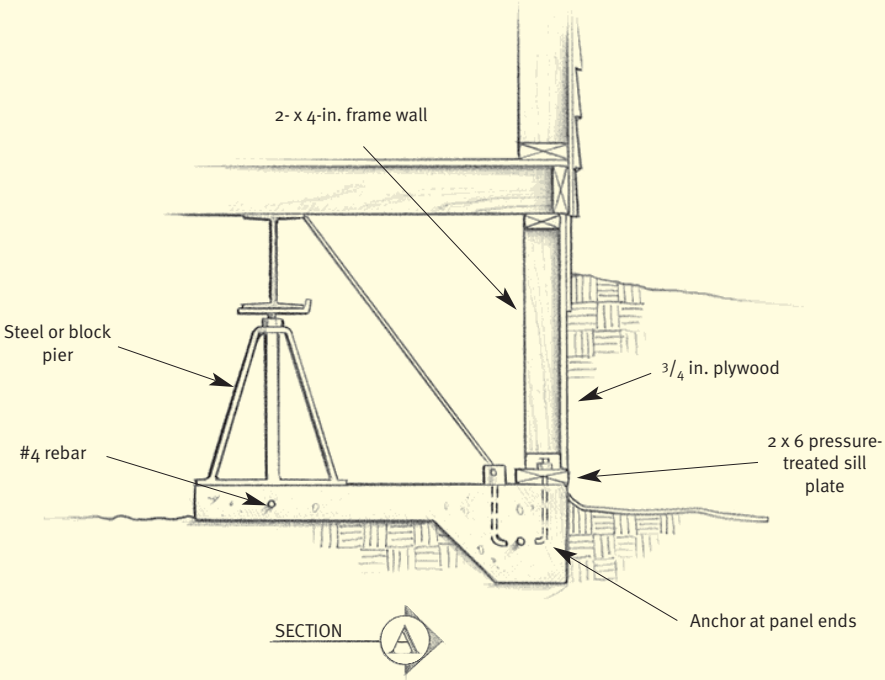

Figure 3.40 The weight of the home is transferred to the ground with jack stands and stablilized with anchors.

Because of the depth to which the home is recessed, soil removed from the excavation is more than sufficient to backfill against the foundation wall and create the steep grade (5% for 10 ft) required for proper water drainage.

Installation of homes on North Creek's foundations is simple and straightforward. Because the foundation is recessed into the ground, the home is backed right onto the footers by the delivery truck. The flat concrete surface is a good base for manual jacks and other installation and stabilizing tools. The walls can be constructed and placed last, so the working environment under the home is open and unrestricted.

The foundation vents at North Creek are sized and spaced according to the Uniform Building Code, which governs residential construction in Missouri. Because 8 in. of foundation wall is exposed above the top of the soil, there is plenty of room to cut the vents into this wall. Crawl space access is through a 2- x 3-ft chute located along the rear yard wall.

Garages are optional in this development. When ordered, the garage foundation (slab and footer) is installed adjacent to the manufactured home, but not attached to it. The garage foundation floats on top of the soil. If the garage shifts with frost heave, it will not impact the home (see **Figure 3.41**).

This system likely meets FHA's definition of a real property permanent foundation. It can easily be altered to meet a variety of more difficult site conditions, such as deeper frost levels, high winds, heavy snow loads, and earthquakes. By increasing the height of the piers and exterior walls, the home can be elevated to a height suitable for placement within a flood plain.

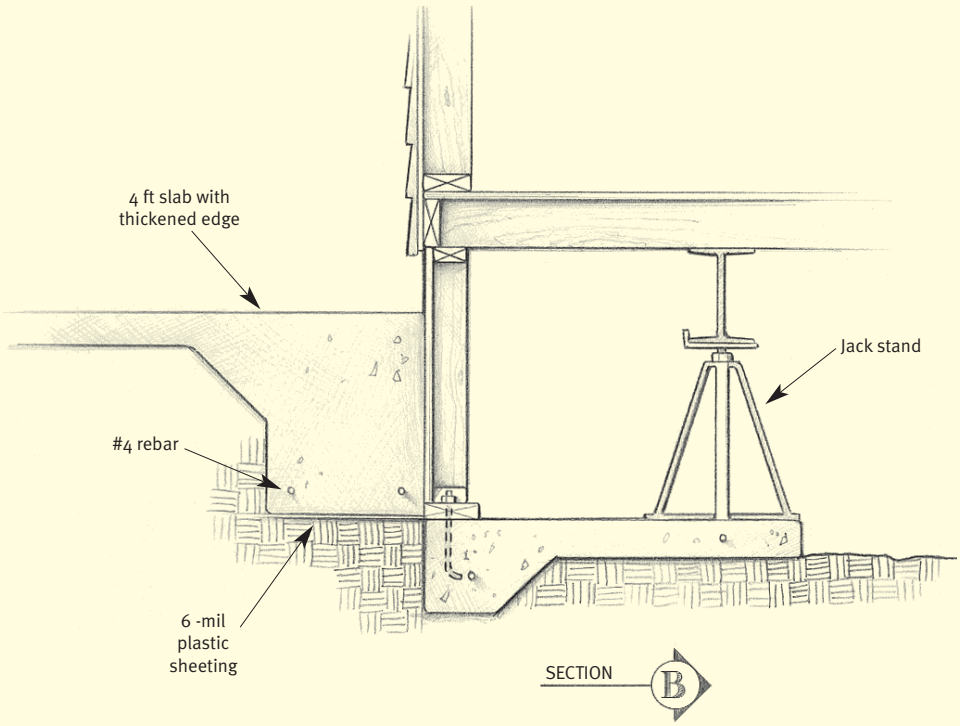

Figure 3.41

Case Study 9

Germantown, WI

Asset Development Group (Wick Continuous Crossbeam Frame)
8050 N. Port Washington Road
P.O. Box 170872
Milwaukee, WI 53217
(414) 352-9310 Tel.
(414) 352-6944 Fax

The crawl space foundation system used by Asset Development Group in its Brookside Meadows land-lease community takes maximum advantage of Wick Building Systems' continuous crossbeam frame. This is a load-bearing perimeter wall foundation with footers excavated to below the frost line. The home rests on only the perimeter walls and on a row of columns down the mating wall.

Home manufacturer Wick Building Systems devised a unique manufactured home chassis that has the outward appearance of a standard steel frame but is designed to transfer all of a home's loads to the exterior foundation walls and to a row of supports evenly spaced along the mating wall. The frame incorporates a 4- x 8-in. steel-bearing block welded to the end of each of the full outriggers that are spaced 8 ft apart along the outside of each of the chassis I-beams. Flat steel-bearing plates are welded to the bottom of each of the bearing blocks and rest on wood blocks set within pockets in the foundation wall (see **Figure 3.42**).

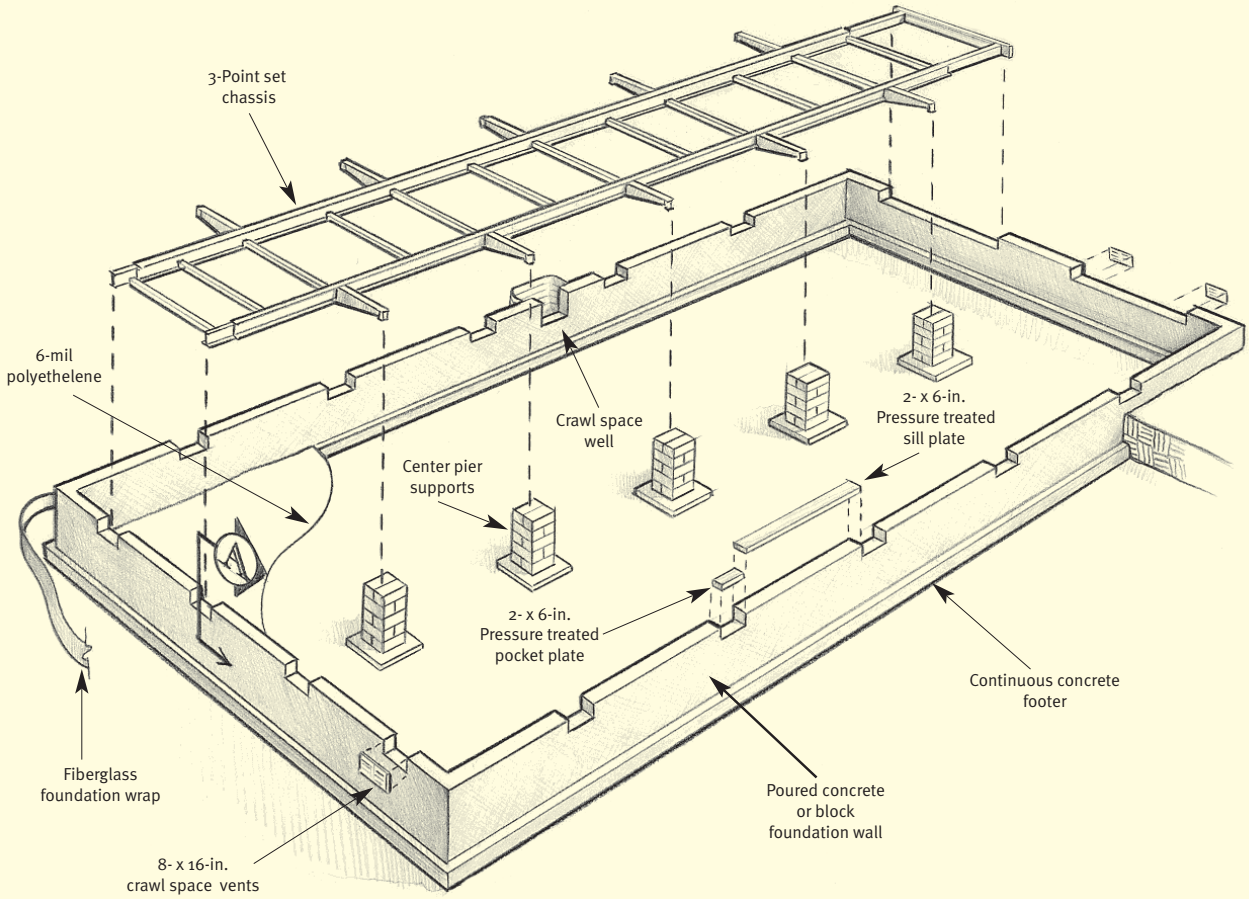

Figure 3.42 Isometric diagram showing cutouts in the exterior foundation wall to accommodate the load-carrying outriggers.

The two main steel I-beams are joined by heavy steel cross members welded 4 ft intervals. Welded on at the front and rear ends of the main beams are shorter beams of slightly less vertical depth, as extensions. These extensions rest on wood blocks set in the front and rear end walls of the foundation.

The poured concrete foundation is supported by spread footers placed below the frost line. At 8-ft centers along each of the sidewalls, an 8-in. deep by 14-in. long pocket is formed into the concrete. This pocket serves two purposes: to support the steel bearing blocks at the end of each chassis outrigger and to provide ventilation for the crawl space. Access to the crawl space is gained through a 24- x 24-in. opening formed into one of the exterior sidewalls. A corrugated, 36-in. steel corrugated well protects the opening when the home foundation is recessed.

Pressure-treated 2- x 6-in. lumber is carefully cut and secured to the bottom of all the pockets with anchor bolts. Additionally, treated 2- x 6-in. sills are secured to the top of all stemwalls with anchor bolts (see **Figure 3.43**).

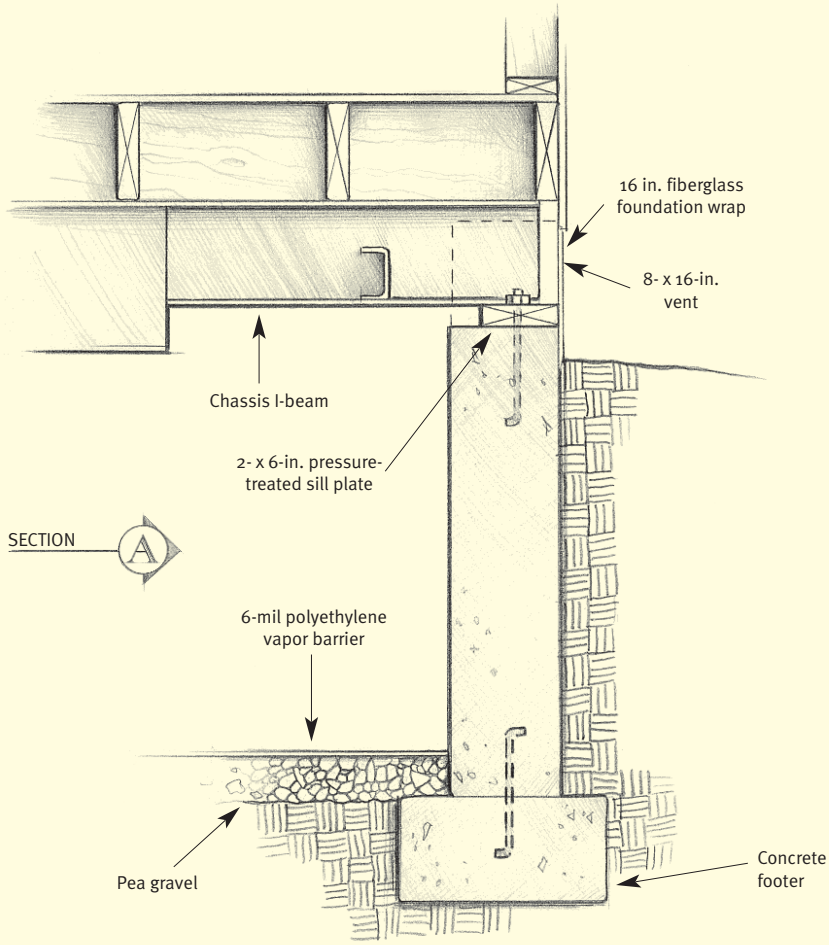

Figure 3.43 The reinforced I-beams transfer the loads to the perimeter foundation wall.

The interior of the foundation may be backfilled, but must be finished with a 6-mil polyethylene vapor retarder, laid over a bed of pea gravel. The manufacturer specifies at least 24 in. of clearance to the bottom of the chassis.

Homes are normally installed on this system with a crane; however, roller systems may also be used. With either method, homes are delivered by truck to a spot adjacent to the foundation before installation begins (see **Figure 3.44**).

Each home has an attached, site-built 2-car garage. At the wall locations inside the garage, the foundation chassis pockets are sealed and finished with fire-stop protection. Garages are installed either on the sidewall or the end wall of the homes.

The Brookside Meadows development was one of the first to make mortgage loans to homeowners in a land-lease community purchased in the secondary market by the Federal Home Loan Mortgage Corporation (Freddie Mac). The foundation system is expected to meet the definition of an FHA permanent foundation.

Figure 3.44

Slabs-on-Grade

DESCRIPTION

A slab is a foundation that is designed to provide all necessary structural support to a manufactured home in an economical manner. The home is typically elevated above the slab, creating what appears to be a conventional crawl space under the home. However, to distinguish this group of foundations that, even in the coldest climates, sit above the frost line and are monolithic (i.e., the home sits on a single, integrated structural element), they are separately classified within this guide.

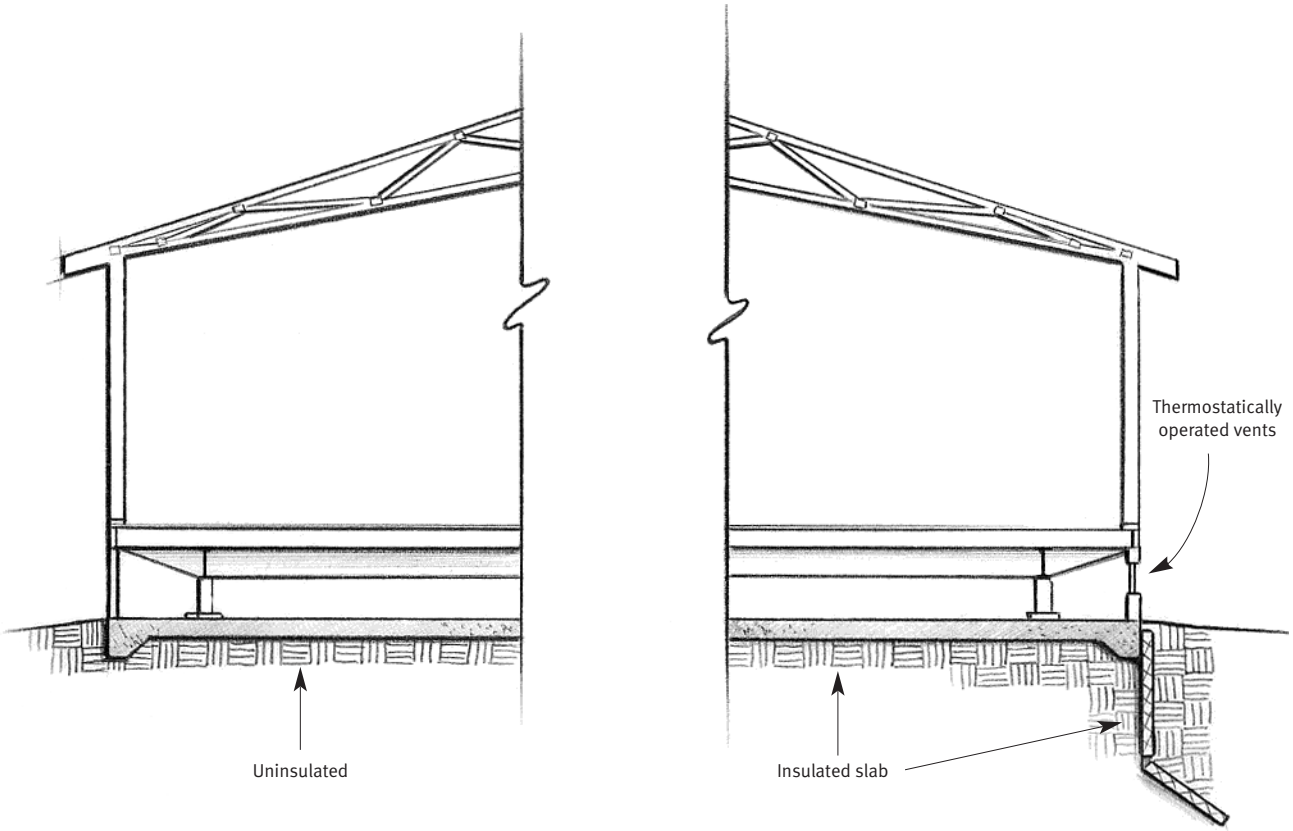

Figure 3.45 A slab supports the home on top of the earth. The slab is uninsulated or insulated, depending on the local conditions and goals of the designer.

In this regard, the term "slab," when applied to manufactured housing, has a slightly different meaning than it does when used with site-built homes. A slab used for a site-built home is considered to be at once a structural support for the rest of the building (as it is for a manufactured home), and a semi-finished floor, over which linoleum, tile, wood, or carpeting is installed as the finished surface. All manufactured homes are delivered with full raised floors that include insulation and finished surfaces as well as electrical and plumbing systems and, in most areas, heating/cooling ducts. The slab under a manufactured home, therefore, does not act as the home's floor, but rather as a platform for the home.

Slabs are not unique to manufactured homes. They are recognized and accepted for many other types of buildings, including site-built single-family homes and commercial structures. They are commonly found in areas with freezing and expansive soils.

Part of the reason slabs are economical is that they are relatively thin, extending only as deep as required to carry the structural loads. In northern climates with deep frost depths, the slab generally does not run below the frost line. In such cases, the slab (often referred to as a "floating" slab) can shift as the soil underneath expands and contracts in response to forces such as frost heave. This movement can be minimized or eliminated if the ground

under the home is kept dry through the use of effective drainage techniques, such as drain tile and sump pumps. In contrast, properly designed crawl space and basement foundations remain fixed, even if the adjacent soil moves. The propensity of uninsulated slabs to shift with soil movement may keep them from meeting state or local requirements for a real property foundation and therefore from qualifying for real property financing.

Figure 3.46 The simple design of slabs minimizes the time required for fork work and provides a level base for the home.

An insulated slab is insulated around its perimeter, which keeps the ground under the slab warmer than the surrounding soil. For this design (commonly referred to as a shallow frost-protected foundation) to work during the coldest months, the crawl area ventilation must be closed to prevent cold outside air from cooling the space under the home and freezing the soil beneath the slab. The modest heat loss through the floor of the home keeps the crawl area warm, and the insulation traps the heat in the soil, thus providing a heat sink that minimizes the chance of the ground freezing under the home. Although subject to review by the local authority, this design variation may qualify as a real property foundation.[16]

ADVANTAGES

The primary attraction of a slab is its relatively low cost. Because of the normal rectangular shape of the slab, the time and materials required for forming are minimal, compared to other concrete designs. Because there are no footings or piers extending into the earth below the slab itself, in areas that have deep frost lines or expansive soils, the savings can be significant when compared to deep piers.

DISADVANTAGES

As noted earlier, uninsulated slabs are not typically used for homes intended to meet real property requirements. However, in areas where there is no frost or a relatively shallow frost line, the cost to qualify the foundation may be modest (see "Real property classification" on Page 3.34).

If the manufactured home will have an attached garage, it may not be possible to economically pour a single slab for both structures because of the vertical height difference between the garage slab and the floor of the house. The two foundations can be separated by an expansion joint, as any variation in movement between the home and the garage could be structurally damaging to either or both. Possible differential movement between adjacent slabs should be considered.

A slab is less suitable than other designs for sloping lots. In most such instances, it is necessary to excavate to a level site ("cutting a level pad").

Type of foundation system:
Slab-on-grade

Initial Cost:
$$ – $$$

Real property foundation:
Yes

Installation time:
🕘🕘

Use in seismic areas:
Yes

Use in flood hazard areas:
Yes

Use in areas subject to frost heave:
Yes

Non-proprietary

[16] See Chapter 1 Page 1.3. Also refer to NAHB's Design Guide for Frost Protected Shallow Foundations (June 1994) in Appendix B: Additional Resources.

CONSTRUCTION

A slab must be capable of handling points of concentrated loads, such as centerline (ridge beam) piers, or distributed loads, such as along exterior walls. The slab must be able to resist upheaval pressure from the ground below and not fail to act as a structural unit or monolith (see **Figure 3.47**).

A number of techniques and materials are used to reinforce a slab. The variables that affect rigidity and durability include the overall thickness of the concrete and the incorporation of various types of reinforcing encased in the concrete.

The use of post-tensioning, while not common for such relatively lightweight construction applications as manufactured homes, is nevertheless a way to dramatically increase the strength and load-carrying capacity of concrete slabs.

Figure 3.47 Slabs provide a monolithic structural base that if uninsulated can move with shifting soil pressures.

SLAB VENTILATION

With rare exceptions, there is no difference between slab, anchor and pier, and crawl space foundations with respect to ventilation requirements. Adequate ventilation is needed to dissipate moisture migrating into the area under the home from other sources. Vents are normally provided in the exterior wall or the skirting surrounding the home. As with other foundations, provision for cross ventilation is essential. The area beneath a manufactured home installed on a slab is accessed through an opening in the exterior containment wall or skirting (see **Figure 3.48**).

Figure 3.48 The access opening for this system is just behind the rear steps. Crawl space vents are evenly spaced in the foundation walls.

INSTALLATION

Generally, slabs offer a ready subsurface for the installation of a manufactured home. The home is merely driven over the slab for assembly. The hard and level slab provides an ideal work surface for the installers to complete the connection between foundation and home. Once rough-spotted, the close-off plastic can be stripped and the two (or more) sections leveled and mated together.

The materials used for crawl space foundations can also be used for a slab. The most popular piering material is the hollow-core concrete block. These blocks can be used at the manufacturer-specified points along the chassis I-beams and the mating wall, the latter for support of the ridge beam. Alternatively, a fabricated steel stanchion with screw thread cap can be used.

METHODS OF ATTACHMENT

To act in unison with its slab foundation, a home must be permanently anchored to the foundation. This is commonly accomplished through the use of anchors embedded in the concrete. Homes also can be permanently affixed

through welded or bolted connections between the chassis and the piers, if the piers are permanent. Examples of permanent piers are mortared and grouted concrete blocks, and steel stanchions bolted to the slab. The permanent attachment also may be through a structural, load-bearing exterior wall (see **Figure 3.49**).

Figure 3.49 This view under a home shows block chassis supports, embedded anchors, and masonry exterior wall.

CONSTRUCTION CHALLENGES

Compared to basements and crawl space foundations, the slab offers fewer construction and installation challenges. Slabs are commonly poured somewhat wider and longer than the homes for which they are intended. Thus, less precision is required in their layout and preparation.

The uppermost challenge is the need to pour a high-quality, well-reinforced singular mass of concrete, as it will literally become the ship upon which the house will sail in heaving soil conditions. There cannot be any chance of failure or fracturing into disconnected sections—the consequences of which could be severe for the home.

A garage with a slab floor adjacent to the home's floor would need a carefully designed offset pour and expansion joints between home and garage (see **Figures 3.50** and **3.51**). Otherwise, any weak points in the concrete between the house and garage could grow to a large structural problem if the monolith were to separate under pressure and the pieces to move independently of each other. This could create structural damage at the point where the house and garage connect.

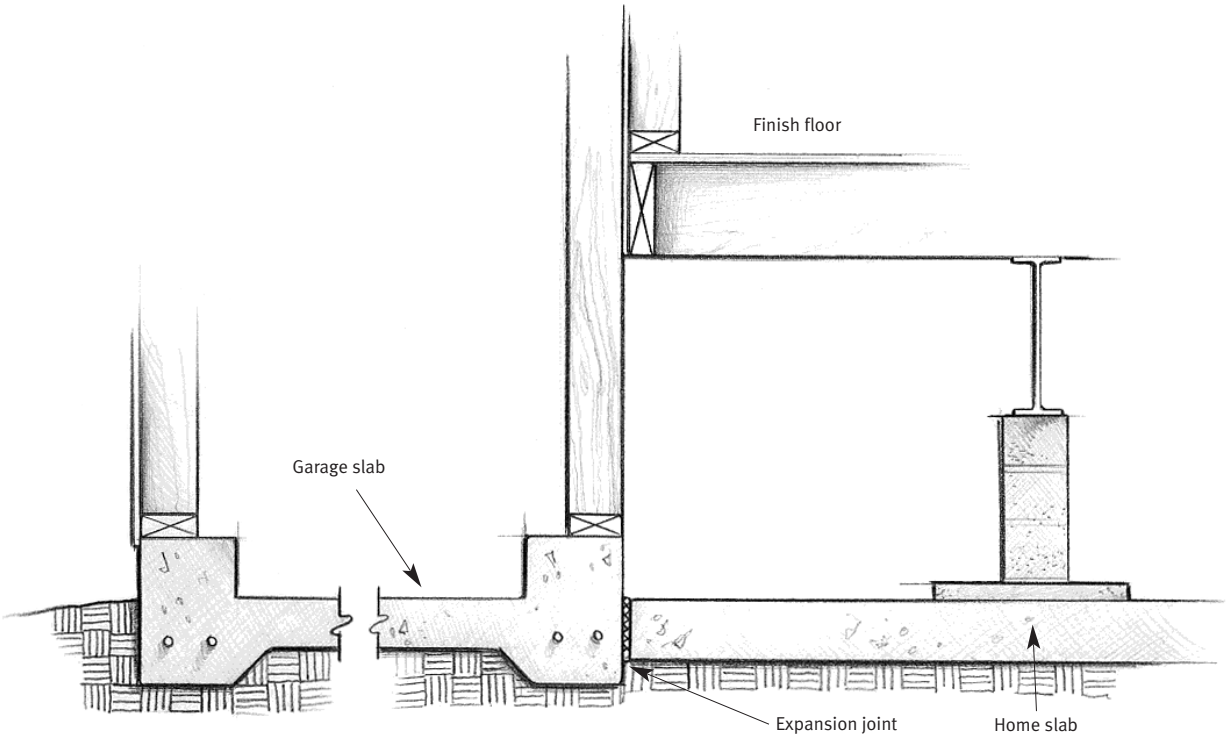

Figure 3.50 The slab presents challenges when adding a garage.

COST

The overall cost of a typical slab, and the attendant material and labor to install a manufactured home upon it, falls in the low to mid-range of foundations covered by this guide. More concrete is consumed than in simpler ribbon footing crawl space foundations. However, less form construction and less restrictive dimensional tolerances create savings. But the dramatic savings result from not having to excavate or pour concrete to any significant depth in the ground. Consequently, the relative cost savings increases in areas with deep frost lines.

Figure 3.51 Side-by-side slabs for a house and garage. The elevated garage foundation will keep the house and garage floors near each other vertically.

REAL PROPERTY CLASSIFICATION

Except in the case of uninsulated slabs in areas with deep frost penetration, slab designs may be made to meet requirements for real property financing. In particular, insulated slabs and slabs used in areas with no frost penetration may meet real property criteria.

INSTALLATION TIME

A slab creates an ideal environment for the house installation process: the home's footprint is over a firm, clean, and often dry platform. Level concrete is perfect for the safe and rapid lifting of a home with manual jacks to remove the wheels, axles, and hitches, and to rest the home upon its supports. These advantages usually speed up the installation process.

WIND LOAD RESISTANCE

A slab is an excellent base to which a house can be permanently secured with ground anchors embedded in concrete. When properly engineered and installed, these anchors can give a home the horizontal resistance necessary for wind load resistance. Because of varying wind load potential and standards across the country, the installer should verify anchoring requirements before pouring the slab.

GRAVITY LOAD RESISTANCE

Weight loads from the manufactured home and its future contents are transferred to the ground and spread over a considerable area by the slab. This assures that the foundation can support the home even in the lower ranges of soil-bearing capacity.

SEISMIC LOAD RESISTANCE

In higher seismic zones, slabs are required to meet more stringent design and engineering requirements. A foundation system that is designed to move under pressure from the earth below is less suitable for use in the higher seismic risk zones. Seismic load engineering may involve detailing connections for large withdrawal loads and the possibly designing the slab as a reinforced "structural mat" foundation.

FLOOD RESISTANCE

Although no home should ever be installed in a floodway, slabs can be used successfully to support homes located in the flood plain provided the floor of the home is above the 100-year base flood elevation. Knowledge of the soil upon which the slab is to be poured, with respect to its behavior when saturated, will help decide whether a slab is the best foundation selection in a flood plain. Standing water may act to scour the area under a shallow foundation, impairing its performance once floodwaters recede.

FROST HEAVE

If properly designed and installed, slabs can resist the forces of frost heave. The two major strategies, insulating the slab and taking steps to keep the ground under the slab dry (e.g., use of drain tiles) are proven and successful measures. Uninsulated slabs in frost-prone areas may be subject to shifting when exposed to frost conditions.

Case Study 10

Milwaukee, WI

Asset Development Group
8050 N. Port Washington Road
P.O. Box 170872
Milwaukee, WI 53217
(414) 352-9310 Tel.
(414) 352-6944 Fax

This case study presents two similar slab designs developed for Asset Development Group over a span of 17 years. Asset utilized the slab design after years of trying to work with various forms of deep piers to meet Wisconsin's frost depth requirements.

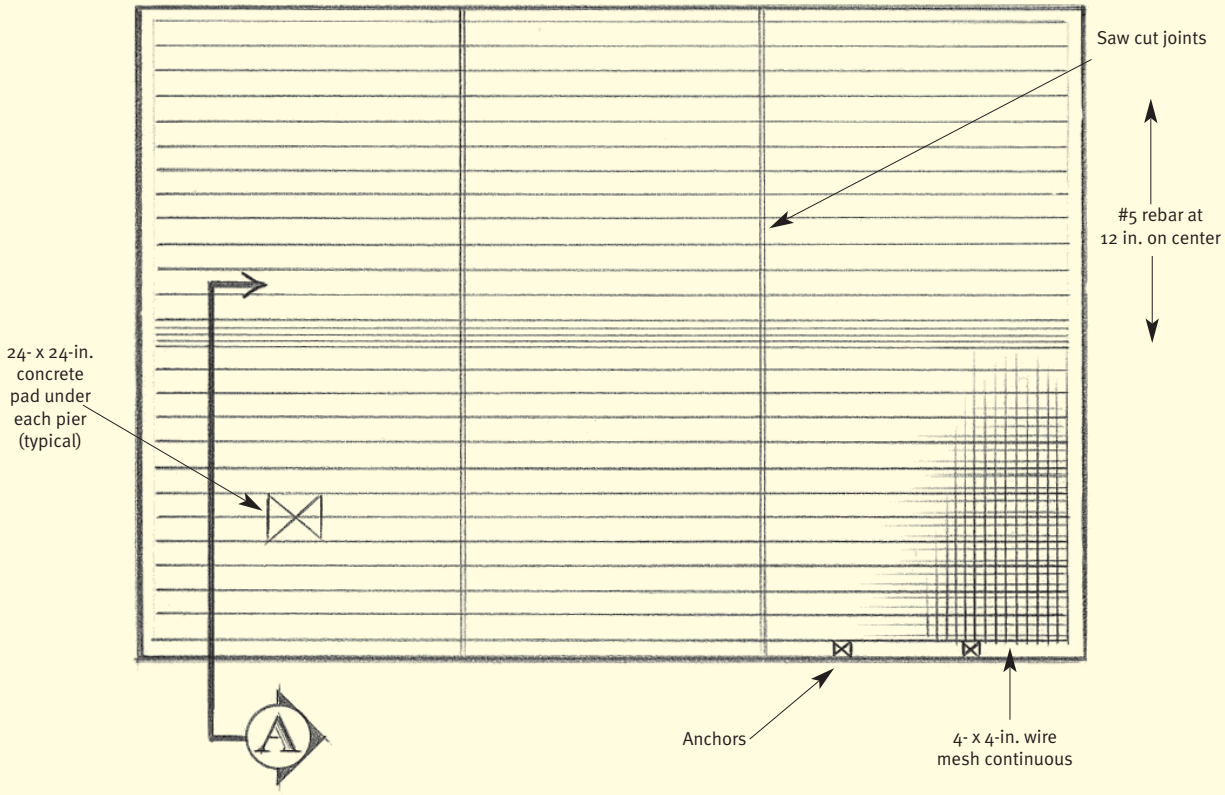

Figure 3.52 The slab design calls for anchors embedded in the concrete and saw-cut joints for expansion.

Design option 1 is a "one-type-fits-all" slab design that is sufficiently flexible to support and anchor just about any home subject to the most extreme snow or wind load. Provided the anchoring devices are properly installed, a home can be stably anchored to the slab in all four directions. The slab thickness and considerable use of reinforcing prevent the slab from cracking when the

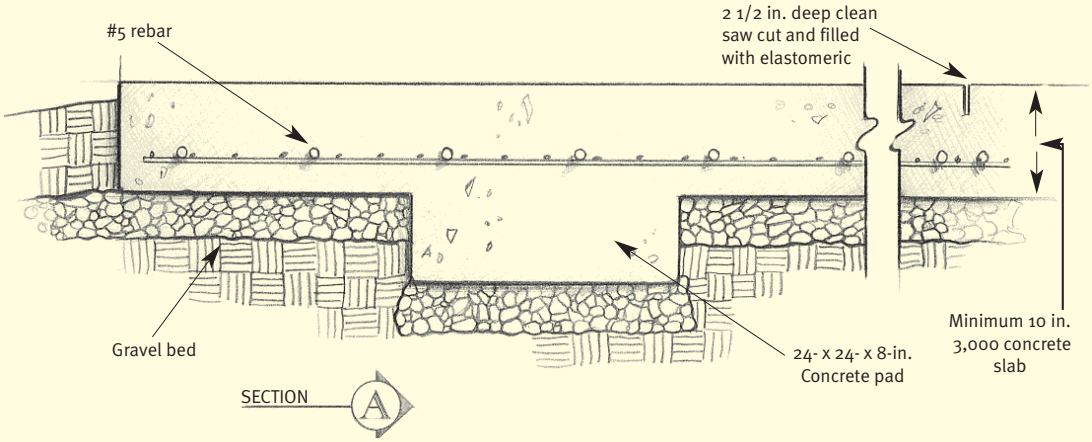

Figure 3.53 The generously proportioned slab is thicker at loading points.

soil moves. The slab provides an effective radon and vapor retarder and permits addition of a perimeter foundation wall or skirting. Installation requires the equipment typically found on the construction site.

The biggest drawback to the design is its cost. Depending on location, this design could cost upwards of $6,000. For a 38-ft home, the design requires more than 30 cubic yards (cu yd) of concrete, a rather generous amount, and calls for reinforcing bars spaced every 12 in. underlaid with 4-by-4 wire and mesh.

Foundation cost reductions are possible by taking the following steps: thinning the slab in the center, limiting the use of reinforcing bar to the edges for anchor reinforcement, and eliminating the 24- x 24-in. concrete pads under the piers (the slab is thick enough to support them). Thinning of the pad in the central area to about 6 in. would save about 8 yd of concrete. Fiberglass-entrained concrete with rebar at the edges for anchor reinforcement would cut cost without compromising structural performance.

This uninsulated slab is not sufficiently deep to meet the FHA's definition of a permanent foundation, unless the site has a very shallow frost depth.

Design option 2 is a variation in which a 4-in thick slab is used to provide a base for perimeter enclosure walls and interior piers. The design calls for rebar-reinforced concrete ribbons under the perimeter, and chassis rails and concrete reinforced with 6-by-6 wire mesh between the runners (see **Figure 3.54**).

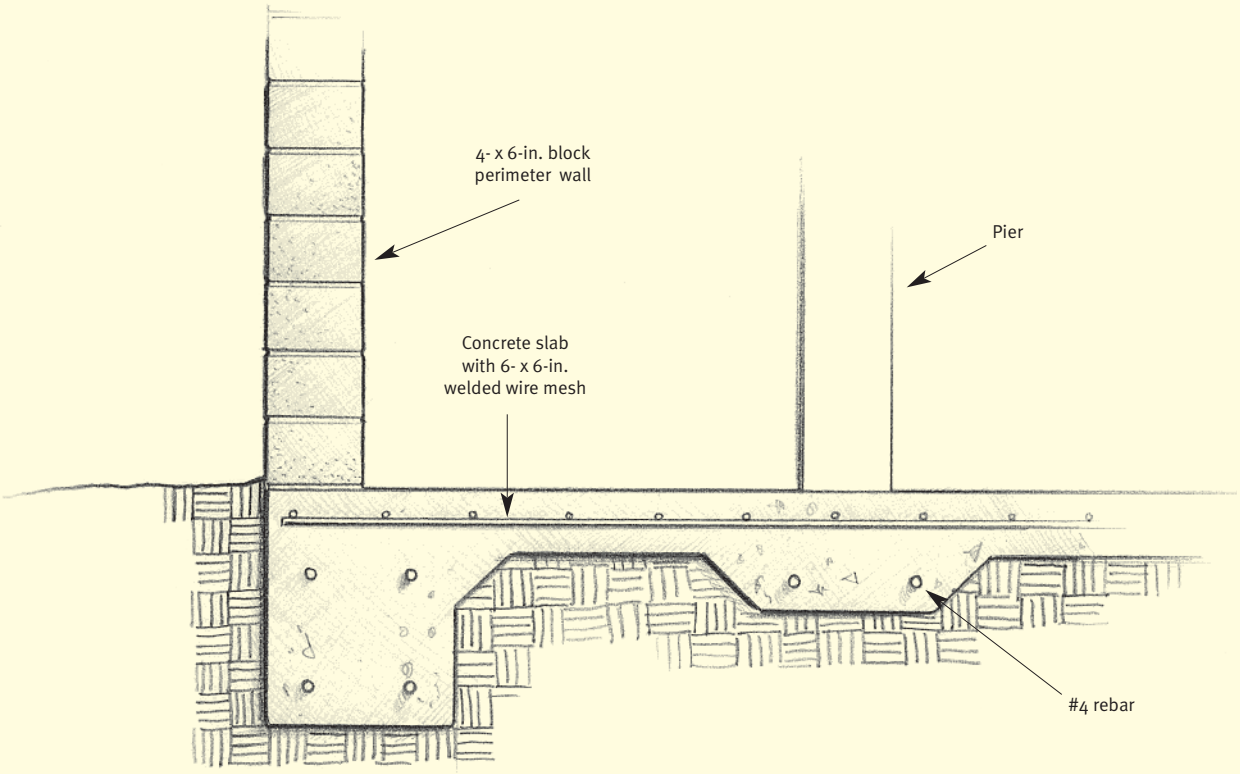

Figure 3.54 Asset Development also uses a thinner slab, providing a more economical use of poured concrete.

This foundation works best on level ground; it requires heavy construction equipment that can be difficult to get to the building site, but installation can be handled by semi-skilled crews. To accommodate higher roof loads, the design would require additional reinforcing steel and concrete to increase the slab strength.

The uplift restraint system of this design uses slab anchors and strapping attached to the main rails instead of ground anchors, but it does not meet FHA's definition of a permanent foundation. The foundation is not heave resistant, but its monolithic construction protects the home atop it from damage if the ground is subject to movement from frost heave.

Case Study 11

Eau Claire, WI

Asset Development Group
8050 N. Port Washington Road
P.O. Box 170872
Milwaukee, WI 53217
(414) 352-9310 Tel.
(414) 352-6944 Fax

This Asset slab design falls into a group of foundations referred to as "shallow frost protected." Instead of running the footer down below the frost line, the slab edge is insulated to create a thermal barrier. By preventing the earth below it from freezing, the insulation serves to prevent frost heave.

The slab is poured to the exact exterior dimensions of the home's floor joist assembly. It has thicker layer of concrete around its perimeter and down the long axis of the home under the mating line. Sheets of rigid insulation are placed vertically and away from the slab between the slab edge and surrounding earth.

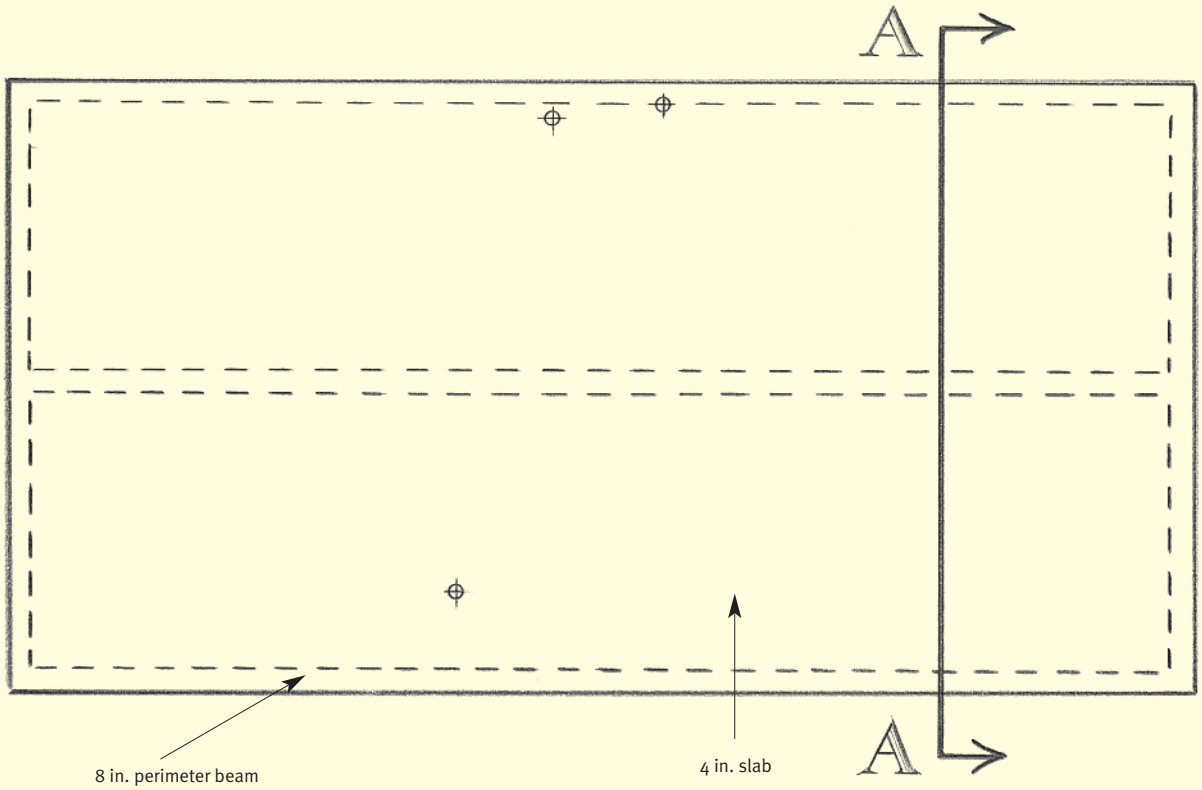

Figure 3.55 This simple slab shape is insulated along the perimeter to avoid running the slab down below the frost line.

When successfully employed, this slab makes a stable platform onto which a manufactured home can be quickly and efficiently placed. The poured concrete can permanently secure any anchoring devices and most types of enclosing or skirting options.

Like most slabs, this design is most economically used on a level site. The system calls for a bed of sand as the subsurface for the concrete; approximately 12 in. of sand appears to be adequate. A 6-mil polyethylene vapor retarder is placed over the sand before the concrete is poured.

The design engineer specified a soil bearing capacity of 3,000 lbs per sq ft, a relatively high bearing strength. Three reinforcing steel rods are used along the perimeter of the slab and down the center. If this system were to be used on soils with less than 3,000 lbs soil bearing capacity, additional steel reinforcing would be appropriate.

The design engineer also specified fiber-reinforced concrete, which incorporates a mix of fibers—most commonly synthetic fiberglass—into the concrete. This product, in use since the 1940s, is an alternative to the use of welded wire mesh to reinforce the concrete. While fiber-reinforced concrete costs an estimated $7 to $10 more per cubic yard, this may represent a savings when the labor and material needed to install wire mesh is considered.

The basic thickness of this slab is 4 inches. A 12-in. wide strip of the perimeter, however, is 8-in. thick as is a 12-in. beam that runs the length of the home at the center (mating) line. The specifications indicate that three #4 (½-in. diameter) lengths of reinforcing bar are to be located along the long edges of the slab and in the thickened center beam. Anchors used to stabilize the manufactured home are embedded in the concrete.

Before finalizing the concrete thickness specifications, the installer must verify that the concrete bearing strength is sufficient for the concentrated loads that will be supported at designated points along the mating line. When the home is installed, any of several pier and blocking systems can be used. To qualify for real property financing, including possibly FHA insured loans (an option with this type of slab foundation), the home must be deemed to be permanently affixed to the slab.

The most unique aspect of this foundation is the foam thermal insulation barriers placed along the outside edge of the concrete. The plans require a 24-in. vertical section of two layers of 1½-in. rigid foam. Another two layers are placed at the bottom of these, and angle away from the slab at 45-degrees (see **Figure 3.56**).

The purpose of the insulation boards is to prevent the soil underneath the home from freezing. The insulation will slow the movement of heat in the ground to the outside sufficiently to keep the winter temperature of the ground under the home higher than the ambient soil temperature. The depth to which the rigid foam is placed depends on local data for the depth to which soil freezes.

Ventilation of this system requires standard openings in the exterior walls erected over the slab perimeter. Since this system is not suitable for recessed installations, a simple access way is installed in either of the sidewalls.

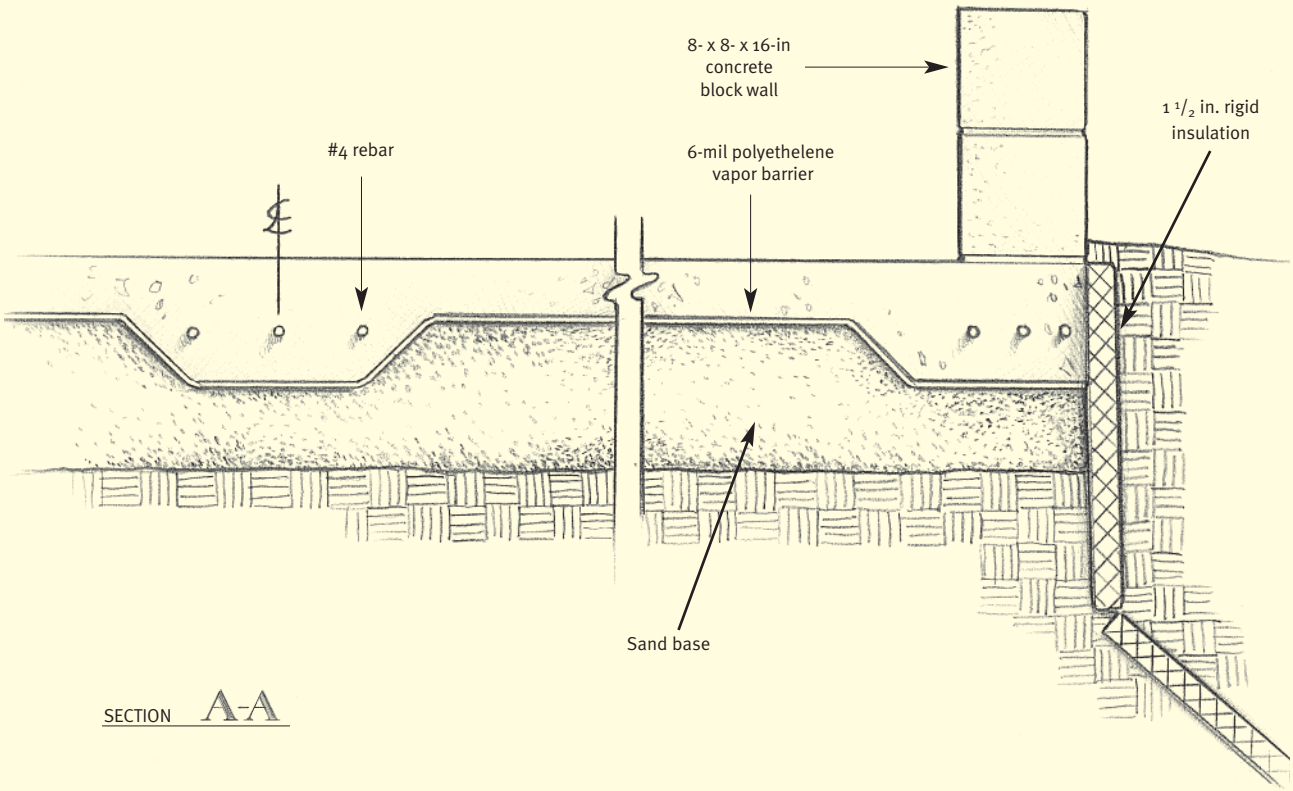

Figure 3.56 The slab edge is insulated with 3 in. of foam sheathing extending down and away from the home.

Case Study 12

Hyde Park, MD

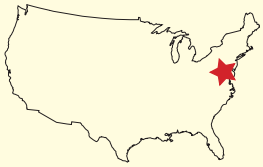

Jensen's, Inc.
246 Redstone St.
Southington, CT 06489
(860) 793-0281 Tel.
(860) 793-6909 Fax

This Jensen's concrete slab foundation is relatively easy to construct, has an economical design, and permits a fairly quick home setup. It can be finished with conventional tools and small power equipment, and the home can be easily rolled into place. Using a slab is particularly economical in deep frost areas, such as New England, where many of Jensen's communities are.

Jensen's had three objectives when it began adapting the slab-on-grade foundation design in the mid-1980s: to eliminate home re-leveling problems, create a solid base for foundation skirting, and develop a better platform to grade soil away from a home to create better drainage.

Figure 3.57 Jensen's finds that their simple designs function as effectively as some of the more complex versions they have developed.

Jensen's slab designs achieve all three goals and are now used in most of their communities. The company has concluded that the simplest of its designs works as well as its most sophisticated ones. It finds that a slab without deep piers can satisfy all of a home's needs, if properly drained.

Jensen's is able to keep the concrete profile relatively shallow (24 in.) in the northern states of Connecticut and New Hampshire, but, ironically, is required to go deeper (36 in.) in the more southerly states of Maryland and New Jersey (24 in. to 36 in. respectively). This has nothing to do with frost depth levels, since these slabs float, but rather is the result of locally mandated code requirements. These local requirements also affect the concrete mix and result in strength variations from 3,000 pounds per square inch (psi) to 4,000 psi.

The center of the slab is 6-in. thick and the perimeter is 24 in; it is reinforced with fiber mesh. The slab's exterior dimensions will typically exceed the home's footprint by 3 to 8 in. in either direction. The home is attached with steel straps secured by anchors embedded into the concrete. Jensen's currently uses j-bolts to secure the anchor head in the concrete slab in some applications, and special steel plates located under the pour in others. When homes are placed in HUD Wind Zone II areas, Jensen's anticipates the need for manufacturer-installed supplemental frame ties.

In New Jersey, Jensen's pours a slab with open cells through which it runs some of the utilities, such as sewer lines. The open cells also save on the cost of concrete.

Jensen's notes that planning for drainage is crucial to the successful use of a slab in frost-prone areas. All unsuitable and organic material is removed before pouring the slab. The pad is poured on compactable soil or a compacted gravel base. For proper drainage, Jensen's tries to maintain a grade of at least 3% away from the slab for a distance of 10–15 ft.

To satisfy local requirements in New Hampshire, Jensen's uses vinyl skirting with ventilation in every other panel; in the other states, each panel is ventilated. Before adopting the every panel approach, Jensen's encountered quite a bit of frame rusting and bottomboard deterioration.

When a garage is built next to a Jensen's home in Maryland, it is placed on a similarly constructed slab, adjacent to the home's slab. The intention is that the garage will "float" along with the house in case of frost heave.

Inasmuch as only the Maryland and New Jersey slabs are on footings that extend below the frost line, they are alone among the various Jensen's designs that would likely meet FHA's real property permanent foundation definition. This is not an issue for Jensen's, as all their homes are placed in their land-lease communities.

Jensen's slab designs can be adapted to difficult site conditions and roof and wind loads. Extremely high roof loads may require a thicker slab at the load points. On a steep slope, the slab could be poured in stepped sections (in multiples of 4 in.) to allow for easy alignment of the tops of the piers. Alternatively, one or more edges can be dug in the high side of a site and a block retaining wall constructed. This eliminates steps to the home.

Since Jensen's owns its communities, it can monitor the performance of the slabs over the long term. The company reports that the need for re-leveling, one of their early issues before adopting the slab-on-grade design, has all but disappeared. It has also encountered no problems with frost heave, a natural concern with slabs. Drainage around homes eliminates "ponding" under homes.

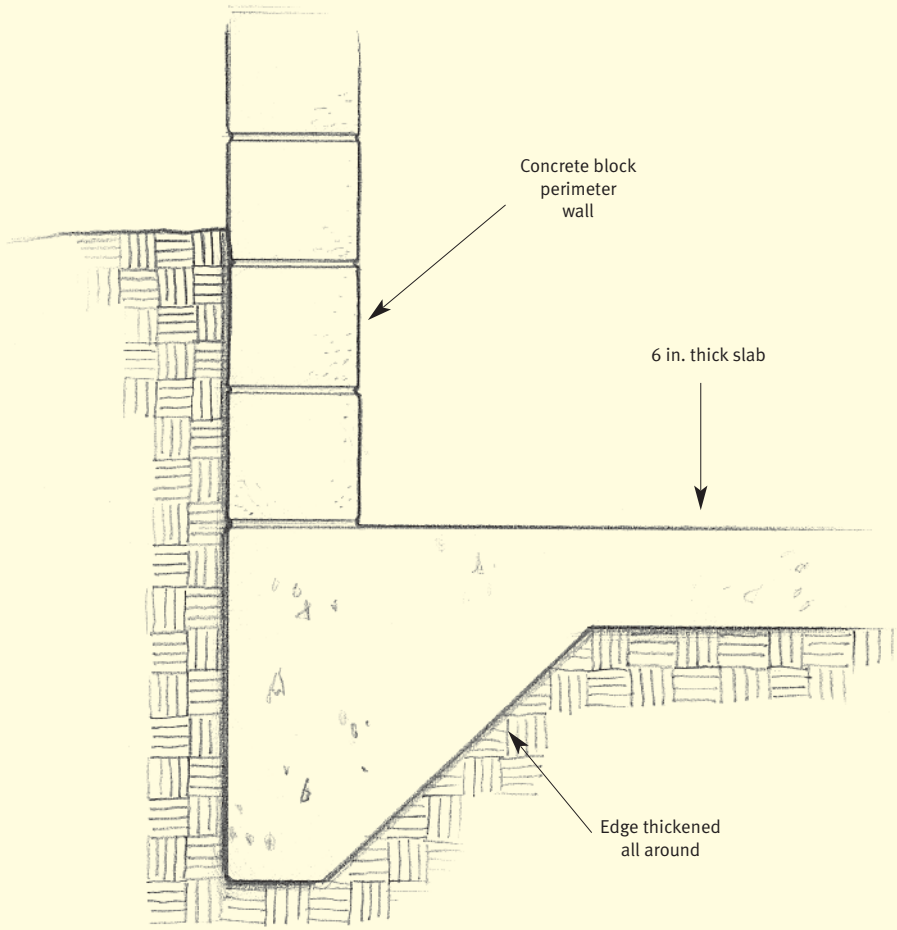

Figure 3.58

Basements

DESCRIPTION

A basement is both a structural support system for a manufactured home and a substantial addition to the livable space of the home. This makes the basement unique among the classes of foundations described in this guide.

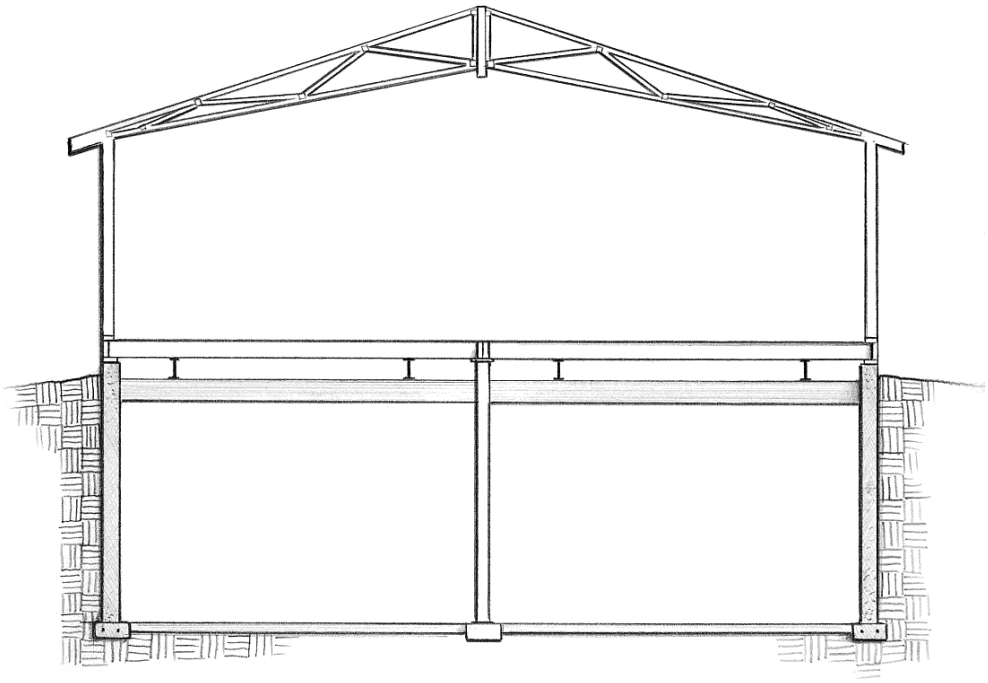

Figure 3.59 Cross section of a typical basement. The depth of the foundation walls lends this system to use in areas with deep frost.

Basements are an integral part of home designs, including site-built homes, particularly in the northern half of the country, from the Intermountain West to the Northeast. Their popularity in this region stems from the basement's ability to give a home excellent support, even in deep frost locations, and to generate relatively inexpensive living space (see **Figure 3.59**). This living area is particularly important to families whose outdoor activities are curtailed in the winter.

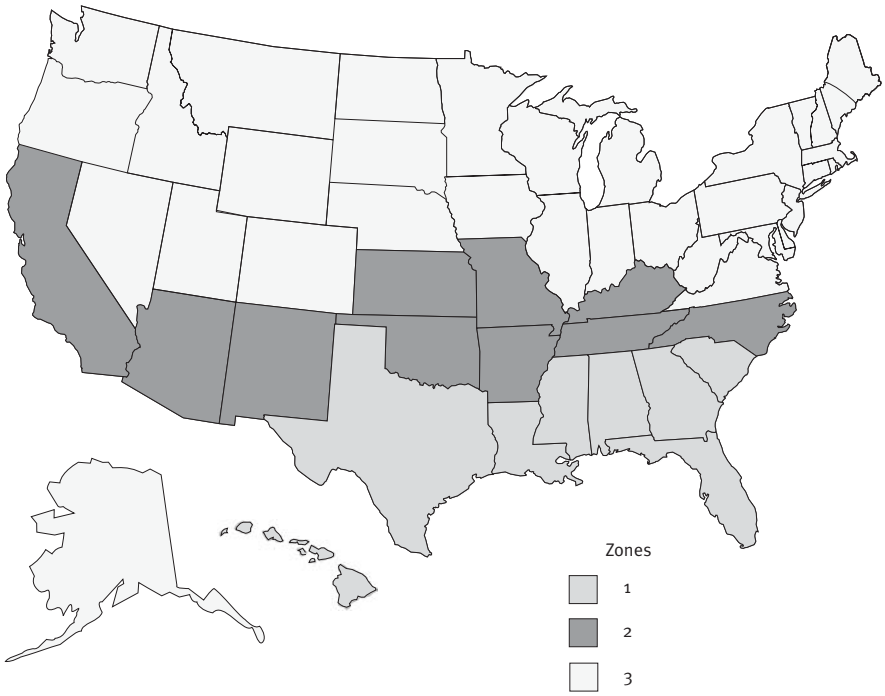

SOURCE: *Part 3280 Manufactured Home Construction and Safety Standards*, April 1999.

Figure 3.60 Thermal Zone Map for Manufactured Housing

The popularity of basements in colder climates is readily apparent from the census data. Basements account for upward of 4 out of every 5 site-built home foundations in the 33 states that comprise Zone 3 of the HUD thermal standards (see **Figure 3.60**). In the Northeast and north central states, the preference for basements climbs to 9 of every 10 homes.

Basements are well suited for sloping lots, especially lots that slope

down to the back of the home. This allows the construction of the "walk-out" basement, featuring doors to a rear yard. Indeed, many developers create special grades to accommodate a walkout basement. If the development site is relatively level, the grading plan will call for substantially elevated pads upon which to perch the homes (see **Figure 3.61**).

Figure 3.61 A home in Denver, Colorado with a walkout basement.

Basements are natural for "low profile" installations. Basements support the full perimeter wall of the home. Typically, supports for the interior of the home are provided at the marriage line. Posts are designed to carry the loads transferred by the floor joists and cross beams that support the chassis.

Basements can be built partially or entirely above ground, creating in essence a two-story, or a split-level manufactured home. This application suggests even more varieties for home placements. Upslope lots can be developed with basements that incorporate a garage that is directly accessible from the street (see **Figure 3.62**).

Figure 3.62 Garage/basement on upslope lot in Oakland, California.

CONSTRUCTION

Basements demand extreme care in their construction. The outside wall cannot be longer or wider than the floor of the manufactured home. If such a construction error is made, the remedy can be very expensive, or can result in a very awkward correction. The basement walls should never protrude horizontally beyond the edge of the perimeter floor joists.

Obviously, the excavation of a large quantity of soil presents a disposal problem. A certain amount of earth can be used to backfill against the basement wall to create drainage slope away from the house. But the exporting of soil becomes a budget item not usually encountered when using slabs or crawl space foundations (see **Figure 3.63**).

Balancing the soil helps to minimize this by excavating less of the basement than would normally be anticipated. With this plan, the basement walls extend 3 or 4 ft above the natural site grade. Earth removed from the excavation is used as backfill to create a substantial grade away from the house and bring the grade to within 8-10 in. from the bottom of the floor.

Because of the size of the structure, basements require far more material (typically concrete and/or concrete blocks, if specified) than other foundations. Up to 90 cu yds or more can be for a basement for a larger two-section home.

Depending on the type of basement and the method used to install home sections, the basement may or may not be fully completed before the home arrives. Homes that are to be rolled onto cross-beam girders need to have the top 6-8 in. of wall (or the top course of concrete blocks) left out to permit the home to be rolled across the basement walls and into final position.

Type of foundation system:
Basements

Initial Cost:
$$$$

Real property foundation:
Yes

Installation time:
🕘🕘🕘

Use in seismic areas:
Yes

Use in flood hazard areas:
No

Use in areas subject to frost heave:
Yes

Non-proprietary

Figure 3.63 Basement showing backfill to create drainage slope.

A well-thought-out plan for securing the home to the foundation will prevent trouble later when installing the home. Since bolts can interfere with the floor joists, foundation straps may be preferable. Cutting off bolts or coring out the sill to allow for the bolt's washer and hex nut is not recommended (see **Figure 3.64**).

Most basements incorporate usable space and are accessed through stairwells from the upper (main) level. Walk-out basements have standard exit doors to the outside yard. In any case, a code-complying access must be incorporated into the structure's design.

Figure 3.64 It is not recommended to core out the sill for an anchor bolt.

VENTILATION

A basement is usually intended to become part of the habitable space of a home, and direct ventilation to the outside is not recommended (see **Figure 3.65**). Therefore, only ventilation that can be controlled by the homeowner is used. Doors, if it is a walkout basement, and operable windows, if they are part of the design, allow natural ventilation.

Basements are often conditioned (heated and cooled), with ducted supply and return assuring adequate air changes. When the basement is part of the conditioned space, the equipment size will need to be adjusted accordingly. In such cases, the home manufacturer must be consulted for requirements covering adequate air flow, ducting, protection against heat loss, etc. A basement that will be heated by the manufactured home's system adds greatly to the burden of the mechanical plant, and must be accounted for by the manufacturer when sizing the heating system, duct system, and electrical system.

INSTALLATION

It is more challenging to install a manufactured home on a basement than on slab or crawl space foundations. Inevitably, the home's sections will be maneuvered over substantial vertical heights. Many contractors who set up homes on slabs or crawl spaces are not well equipped to handle a basement.

The two primary methods of installing homes on basements are the crane (see **Figure 3.66**) and the roller (see **Figure 3.67**) systems, as described below:

Figure 3.65 Basements usually are considered part of the living space and do not require vents for bringing in outside air.

Crane set: Perhaps the more common of the two processes, a crane picks up and places each home section directly on the basement walls (and cross girders, if used). This permits the basement to be more fully complete before the home arrives. Provisions must be made, however, to withdraw the crane's straps before they are trapped between the basement and the home.

Figure 3.66 Above-ground basement with garage.

Figure 3.67 A typical roller system for conveying a home onto its foundation.

A basement may also pose structural issues for the manufacturer. For example, manufactured homes in most cases are required to have a number of shearwalls that carry the loads from the wall and roof diaphragms to the foundation. These shearwalls are supported by multiple joists under each wall. Since this is a unique feature of these homes, special provisions must be made for connecting/anchoring of the multiple shearwall joists and shearwall end columns to the foundation system to ensure adequate transfer of the loads.

For a crane installation to go quickly, the setup crew and the crane operator must be experienced with this process, an appropriate strap spreader device must be used, the homes must be at the site and in position for pickup, and the crane must be able to set up fairly near the basement.

Strap (or cable) withdrawal can be accomplished by measuring and cutting portions of the sill (make sure that the foundation approvals permit this), then replacing them after the straps are pulled out. A good way to avoid trapping the straps between the sections of the home is to set the second module onto jack posts at the center line that are set at a slightly high position. The home will come down and rest in a canted posture that allows removal of the straps. The jacks can then lower the home into a level position.

The cost of using a crane varies by location. Rates are highly variable; some crane operators charge high minimums, others charge steep rates for travel time, so it is wise to shop around. In normal conditions, a two-section home can be set and made weather-tight in 4 hours.

Roller system: Popular for all types of manufactured home installations, the use of rollers is an effective way of moving homes forward, sideways, and up or down mild slopes. Rollers are best suited to place a home over an enclosed foundation system, especially a basement.

Contractors can set up the temporary columns, rails, channels, and roller devices rapidly. Special column supports are used for basement sets. Typically 2 or 3 such rails are used. The home is simply pushed sideways over the basement walls and rolled into final position. Using hydraulic jacks, the home is then lowered onto the sills and cross beams, if used. In either case, the axles, tires, and hitches are removed before the home is lifted onto or rolled over the basement.

INTERIOR SUPPORTS

The supporting structure of a basement depends on whether the home has a standard or integrated floor system.

Standard floor system: The majority of manufactured homes are built with floor joists running either parallel or perpendicular to the length of the home and framed by perimeter joists. The floor assembly of each section of the home rests on the steel chassis, consisting of two steel I-beams. The design of most manufactured homes requires

support for the chassis I-beams at several points, as well as at designated points along the marriage wall. Under HUD regulations, the chassis may not be removed from the manufactured home.

Foundations, including basements, must accommodate a home's support requirements. Thus, basements for manufactured homes commonly feature heavy steel cross beams for transferring the load to the basement walls, and columns in the center of the basement for marriage line support (see **Figure 3.68**).

Figure 3.68 The structure of the basement includes supports for carrying the home at the perimeter and centerline.

Integrated floor system: An alternative design to the conventional chassis system is the integrated floor system. An integrated floor consolidates the floor joists and the chassis into a single structure. The home then has lower transportation and installation profiles, and is supported at the perimeter and centerline wall. This has obvious advantages for basement applications, as it eliminates the need for steel cross-beams and provides more flexibility in locating a stairwell to the basement.

METHODS OF ATTACHMENT

The basement design allows the entire perimeter length of the floor joist system to be attached to the top of the sill, the preferred and most economical approach. The connection is secured with engineer-approved nailing strips (or approved steel nailing plates), fastened according to an engineer's nailing schedule. The strips may then be painted and left as a finished surface.

Some states, such as Minnesota, have specific requirements for connections between the basement sill and a home's floor to allow the soil pressures applied against the basement wall to be resisted by the floor diaphragm. If vinyl siding is to be applied over the sheathing, it is installed last.

CONSTRUCTION CHALLENGES

The basement is fully constructed before the home is installed. This presents a few challenges to the foundation contractor and home installer:

- The basement must be precisely measured and constructed. Installers/builders are advised to consult with the home manufacturer to obtain the exact floor dimensions. There is less tolerance for error than if the foundation were intended for a site-built home, because such errors cannot be corrected by the floor framing carpenters, as they can when site-building a home.
- The location and design of all under-floor utilities and structures (for example, drain lines, heat duct crossovers, steel chassis components, and axle hangers) must be considered in advance.
- The manufacturer must provide a "foundation ready" floor/chassis system, with steel chassis components sufficiently recessed to allow an 8-10 in. clearance from the edge of the floor joists. Alternatively, the manufacturer must construct the home on a floor/chassis system designed to allow a clear span between the basement wall and the marriage wall.
- Unless special precautions are taken, including coating the exterior of the walls with a water- tight sealant, basements are particularly susceptible to water penetration.
- The home manufacturer must provide a stairwell design that permits entry to the basement.

COST

Basements are expensive compared to other types of foundation systems. However, basements can add significant amounts of usable space to a home.

REAL PROPERTY CLASSIFICATION

Properly designed basements would be expected to meet the conditions set for real property financing. When the walls and connections are properly engineered, basements effectively resist wind, gravity, and seismic forces.

INSTALLATION TIME

Constructing a basement requires more time than other foundation systems and, as indicated, is more complicated and requires a greater degree of precision. However, most of the site work is completed before the arrival of the home. Once the transporter delivers the home, the installation contractor positions the home over the basement either using the crane or roll-on methods described earlier. In either case, basement installations require more time than other systems.

WIND LOAD RESISTANCE

With proper fastening of homes to foundations, basements effectively resist wind loads. Because of the firm attachment techniques used with most basements, the homes are well protected and secured to the ground.

GRAVITY LOAD RESISTANCE

In general, the basement design offers the potential for good gravity load resistance. The weight of the home can be transferred through the load-bearing walls or columns to the footers. In most cases, connections, even at the perimeter wall, are economically made.

SEISMIC LOAD RESISTANCE

Although earthquake risks are relatively low in most areas where basements are popular, the mass and depth of a basement, coupled with the attachment methods, offers good resistance to the effects of shaking from ground motion.

FLOOD RESISTANCE

Because a basement can easily fill with water during a flood, this system is not recommended when building in a flood plain. In fact, the basement floor is considered the first floor of a residence under the FEMA National Flood Insurance Program. As such, it would fall below the base flood elevation level for such a home, and the home would not qualify for flood insurance.

FROST HEAVE

Full basements will have footings and concrete floors below any known frost line in the United States. Walk-out basements, on the other hand, may need extra deep footings because the exit door threshold will be at grade level. Overall, basements are relatively impervious to frost-induced movement (see **Figure 3.69**).

Figure 3.69 Basements are typically mostly or entirely below grade, satisfying the most stringent frost depth requirements.

Case Study 13

Midwest

Midwest Retailer

This basement foundation plan is designed for use under a home manufactured with an integrated floor system. An integrated floor replaces the traditional inset chassis with a perimeter beam that is in the same plane as the floor joists. This type of floor design, available from a small but growing number of home manufacturers, requires placement of vertical supports along only the outside walls and the center mating line.

The basement employs a continuous 2-ft wide by 1-ft deep perimeter footer. In poor soil conditions, the footer size increases.

The retailer installs a centerline beam resting on jack posts located at load-bearing points (see **Figure 3.70**). Without this beam, additional posts would be required. Four-inch pockets are formed into the basement end walls that receive the ends of this beam. If additional bearing is preferred, the pockets are deeper, or pilasters are formed into the walls. The retailer is considering eliminating the individual footers for the posts and pouring a continuous 2-ft x 1-ft integrated ribbon instead. The basement floor is a 4 in. slab reinforced with 6 in. welded wire fabric over 4 in. of gravel fill.

The perimeter walls are 10 in. thick and 9 ft tall, reinforced with horizontal and vertical rebar. By setting the home on a 9-ft wall, there is plenty of headroom, allowing for the structural and mechanical services that run below the floor joists and insulation. Some buyers conceal these elements by finishing their basements with drop-down ceilings. When these service components can be located elsewhere, the basement can be made shallower, which offers the opportunity to reduce costs.

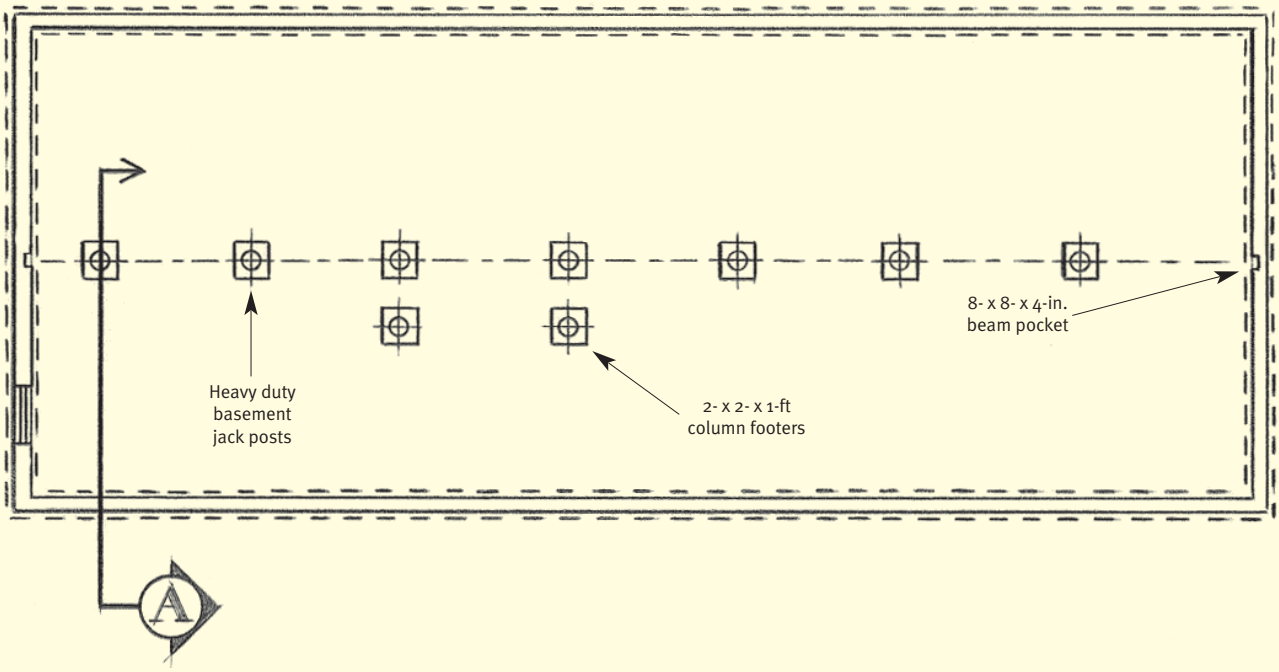

Figure 3.70 This design uses a centerline beam resting on jack posts to carry the weight of the mating wall.

This basement must be carefully constructed to be exactly 1 in. shorter and one inch narrower than the manufacturer's stated floor dimensions. This practice, evolved over many years of placing homes on basements, allows small dimensional adjustments to be made and facilitates the finishing operations.

The home's floor is attached to the top of the basement with foundation anchors (USP Lumber Connectors "FA" foundation anchors) set in the concrete of the perimeter walls. The anchors are run up over the sheathing of the home, but under the vinyl siding, then nailed into place. Metal termite shields cap the tops of the basement walls since the home is in heavy termite areas.

Careful planning is required when ordering the factory's plumbing drops and duct crossovers to ensure that the pipes and ducts won't intersect with centerline supports. The manufacturer can ship the drain line assembly loose, for planning, laying out, gluing together, and hanging after the home is placed on-site.

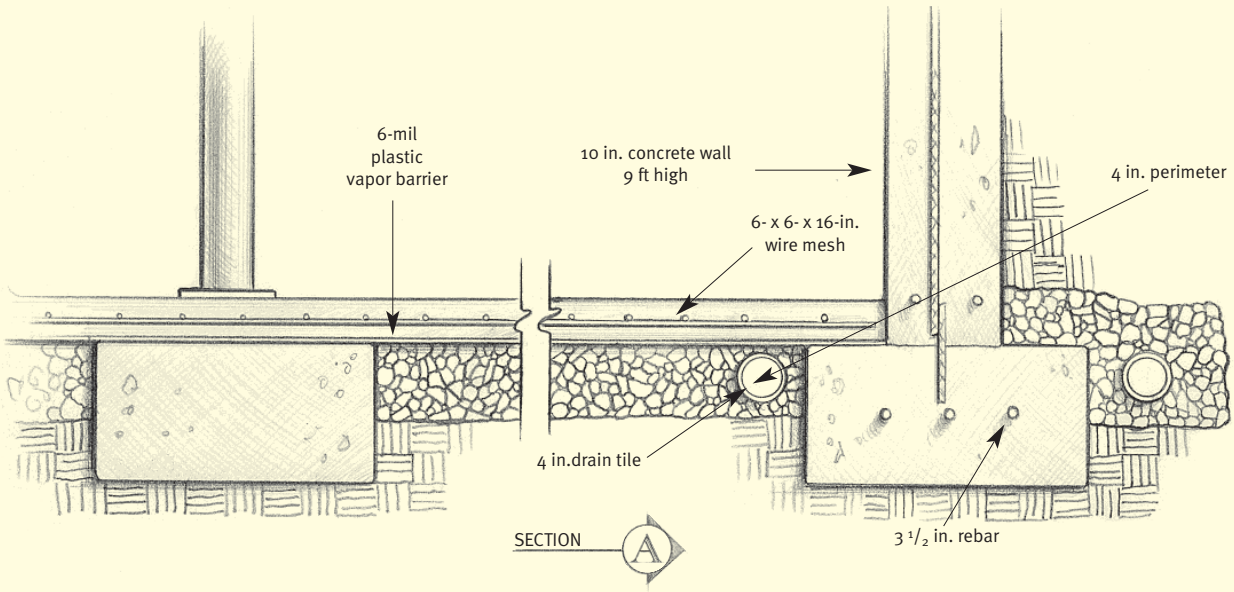

Figure 3.71 Cross section of basement showing structural reinforcing and techniques to keep the basement dry.

The design requires 87 cu yd of concrete for a 26 ft-4 in. x 66 ft home, a relatively expensive amount of material when compared with a structurally optimized design. The retailer deliberately uses extra-thick walls and a heavy centerline beam, noting the company has never had a problem or callback with one of these homes.

Basements, in general, typically run below the frost line in any of the contiguous 48 states, except if used on a sloped site where part or the entire wall is exposed to ambient conditions. The latter design would require running the footing down below the frost line. This design also could be easily adapted for high roof loads.

This basement design requires a contractor with experience in installing homes over excavated sites—deep or shallow. Homes installed on this system require either a crane or a heavy-duty roller apparatus. The foundation would likely meet FHA's definition of a permanent foundation.

Case Study 14 Elizabethtown, PA

Fleetwood Enterprises, Inc.
3125 Myers St.
Riverside, CA 92513
(909) 351-3958 Tel.
(909) 351-3724 Fax

Fleetwood Homes is a home manufacturer and offers this basement option as a prototype that can be adapted to site-specific conditions. It is designed for a HUD-code home with a traditional chassis. It incorporates steel cross-beams that are supported by pockets or pilasters in outside walls and columns along the mating line. These cross-beams support the home's chassis main beams. This design may be less expensive than the integrated floor design profiled in Case Study 13. It also is easier to adapt to typical manufactured home construction, since only a few manufacturers currently offer integrated floors.

Placing steel crossbeams across the top of the basement to receive the home's chassis requires a substantial 30 in. of space between the basement ceiling and the finished floor of the manufactured home. Additionally, there are numerous potential conflicts and interference possibilities that may require more than 30 in. of vertical space (see **Figures 3.72** and **3.73**).

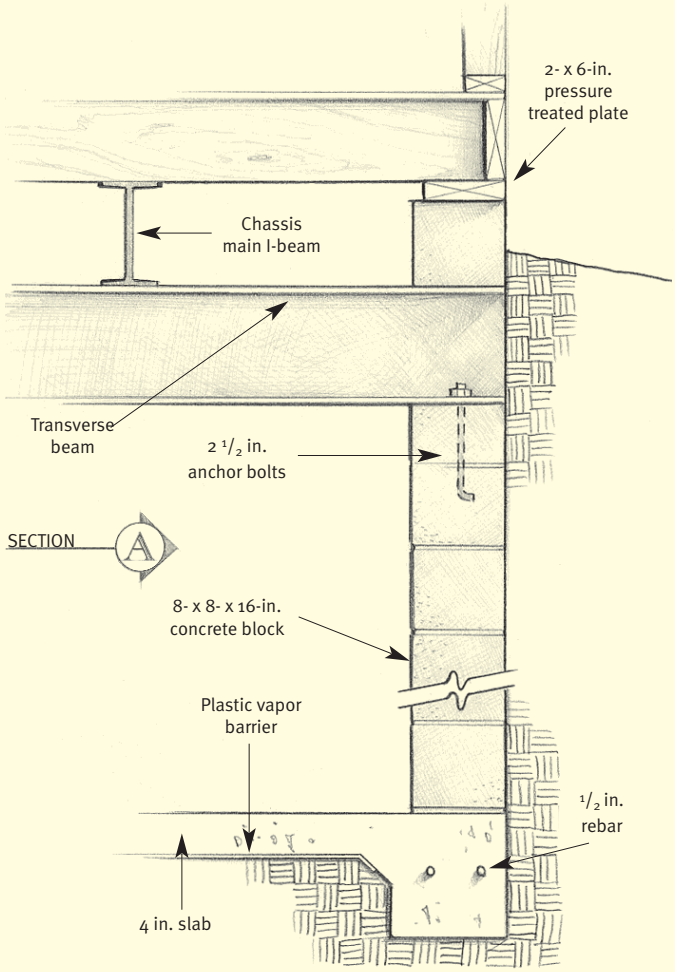

Figure 3.72 Cross section of the Fleetwood basement showing the consideration depth required for the structural components.

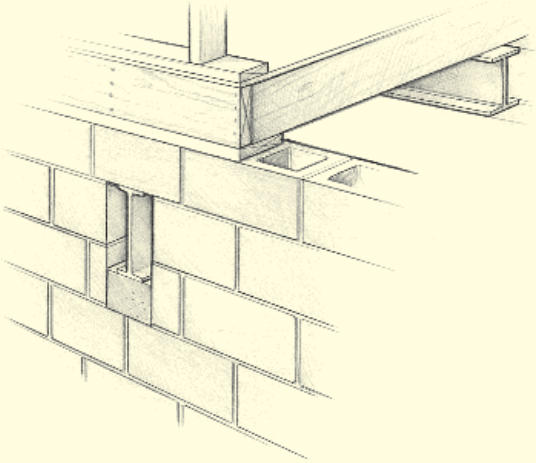

Figure 3.73 Detail of basement wall showing pocket for I-beams.

Utilities or services that hang beneath the home's I-beams, such as axle hangers, drain lines, and gas lines, must be carefully laid out to avoid interference with the additional transverse beams. For example, a drain line running the length of the home may be difficult to place within the 10–12 in. transverse space and might have to fall below those beams to attain the required slope. If dropped below the transverse beams, more headroom will be needed.

The Fleetwood design is a good option for a sloped lot, as it can be constructed in almost any configuration, as long as the top of the basement is in a

level plane to accept the home. Walkout basements are certainly possible with this system, as are windows, in wells or on exposed walls.

This basement requires a roller system or a crane for installation. Steel cutting and fabrication equipment, and welding equipment for bonding the chassis I-beams to the basement cross beams, may also be required.

When the home is rolled over the basement, using the cross beams as rails, the top row of concrete blocks must be added after the home is installed. However, if a crane is used to set the home, this row of blocks can be in place before the home is installed.

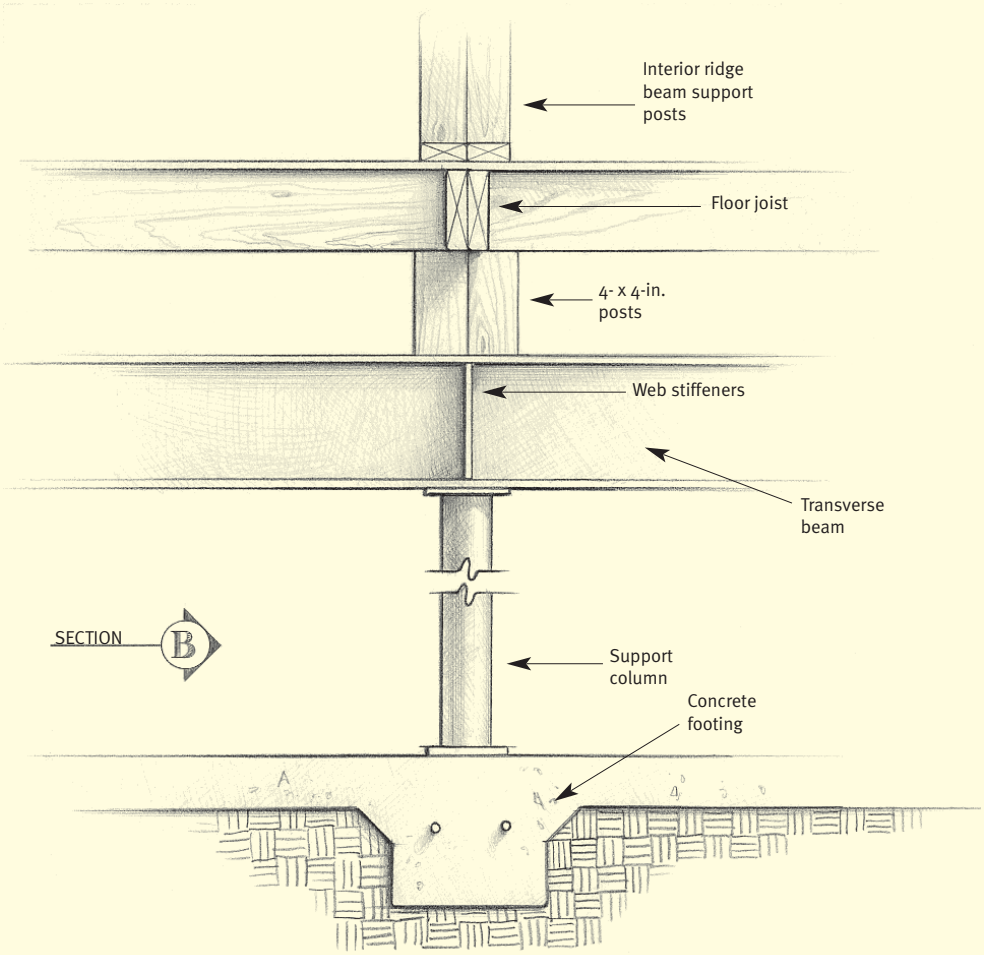

Figure 3.74 Cross section of a home and basement at the centerline showing the column support of the mating wall.

Incorporating stairs with this design is a challenge. Fleetwood prohibits any cutting of the chassis members, including outriggers and crossmembers, to accommodate a stairwell. It also requires that the stair structure be built in a way that does not impose any loads upon the home's floor. As a result, the stair runs will be long, because of the depth of the structure, and must be straight to avoid the chassis main beams. An alternative would be to use external stairs but this is less desirable due to exposure to the elements.

Fleetwood's design and instructions call for welded connections at all chassis/crossbeam intersects, as well as a continuous perimeter wall connection. This makes for a very solid structure.

Few opportunities for cost saving exist when using this type of basement. It might be possible to reduce welding costs and avoid subcontracting by contractors who are not qualified for welding, by using non-steel, non-welded components, such as heavy timbers or Glue lam beams.

The system, as shown, is designed for a house with 40 psf roof loads and an 80 mph wind load. It is expected to meet the FHA's definition of a permanent foundation, and its deep footings protect it from frost heave. Like all basements, it is not for use in any area where the basement floor would be located below the base flood elevation, as this will disqualify the house from FEMA's National Flood Insurance Program. Because of its full perimeter wall attachment, this design is suitable for use in areas with high seismic risk.

INDIVIDUAL FOUNDATION EVALUATIONS: PROPRIETARY SYSTEMS

This section contains information about several proprietary foundation products marketed to the manufactured housing industry. A proprietary system is a product manufactured by a company that owns some protectable interest in the design. Some proprietary systems are patented. There is spirited competition among manufacturers of these proprietary systems, resulting in rich choices for the retailer, builder, contractor, and homebuyer.

The information contained in this section was prepared by the companies. The following products and companies are represented:

- All Steel Foundation, Oliver Technologies, Inc.
- The Anchorpanel Foundation, Fast Track Foundation Systems
- Rigid Foundation Anchoring System, JM Products, Inc.
- The Storm Anchor System, The Anchor Post Company, LLC
- Vector Dynamics Foundation System, Tie Down Engineering
- Xi Foundation System, Tie Down Engineering

The properties of the proprietary foundation systems are summarized in a box as in the example below.

The $ symbols are intended to suggest the relative magnitude of initial system costs, not absolute dollar figures. Initial costs are ranked from least ($) to most ($$$$) costly. As with any rating method, individual designs may be exceptions to these relative placements.

The 🕘 symbols are intended to suggest the relative time required to install the foundation or support system, not absolute installation times. Installation costs are ranked from requiring the least amount of time (🕘) to the most amount of time (🕘🕘🕘) to install. As with any rating method, individual designs may be exceptions to these relative placements.

Company Name
Contact Information

Initial Cost:
$ – $$

Real property foundation:
Yes

Installation time:
🕘 – 🕘🕘

Use in seismic areas:
Yes

Use in flood hazard areas:
Yes

Use in areas subject to frost heave:
Yes

Proprietary

DISCLAIMER

The views and opinions of the companies expressed in Chapter 4 do not necessarily state or reflect those of MHRA and shall not be used for advertising or product endorsement purposes. MHRA does not guarantee the accuracy, completeness, currency or reliability of the information submitted by the companies concerning their proprietary foundation systems. The information obtained from this guide is provided without warranties of any kind, either express or implied, including but not limited to warranties of title, noninfringement or implied warranties of merchantability or fitness for a particular purpose. The use of any information contained in these materials is voluntary, and reliance on it by the user should be undertaken after an independent review of its accuracy, completeness, currency and reliability.

All Steel Foundation System

COMPANY NAME

Oliver Technologies, Inc.

BASIC DESIGN FEATURES

In most cases, the All Steel Foundation System eliminates lateral anchors, straps, and stabilizer plates in HUD Wind Zone I. The concept design of the ASFS Model #1100 series is to resist ultimate design loads of Wind Zone III forces; i.e., ultimate uplift and horizontal loads plus 150% safety factor.

The Model #1100 ASFS is comprised of a 3-sq ft galvanized steel pan, which serves as footer for a steel pier. The steel pier takes the place of a conventional masonry pier at the location in which it is placed. "U" brackets are attached to the pan for attaching square steel support tubes. These tubes serve as the pier and the protection against longitudinal winds. The pans are placed under the main rail steel I-beams of the house. The tubes are installed in an "X" configuration oriented in the longitudinal direction to create a pier and longitudinal brace. The tubes are made adjustable by nesting 1 ¼-in. tubes inside 1 ½-in. tube and locking them to appropriate lengths with 4 Tek screws per arm. The tubes are then attached to the I-beams and the pan with steel brackets and ½-in. diameter grade 2 bolts. The transverse arm is attached to the pan by placing tubing in a "U" bracket and a 2 ½-in. grade 2 bolt. The other end of the tube is then attached to the opposing I-beam by use of an I-beam clamp connector and a 2 ½-in. grade 2 bolt. The transverse arms can be made adjustable by using a 5-ft 1 ½-in. outer tube and a 5-ft 1 ¼-in. inner tube that are also locked together with 4 tek screws.

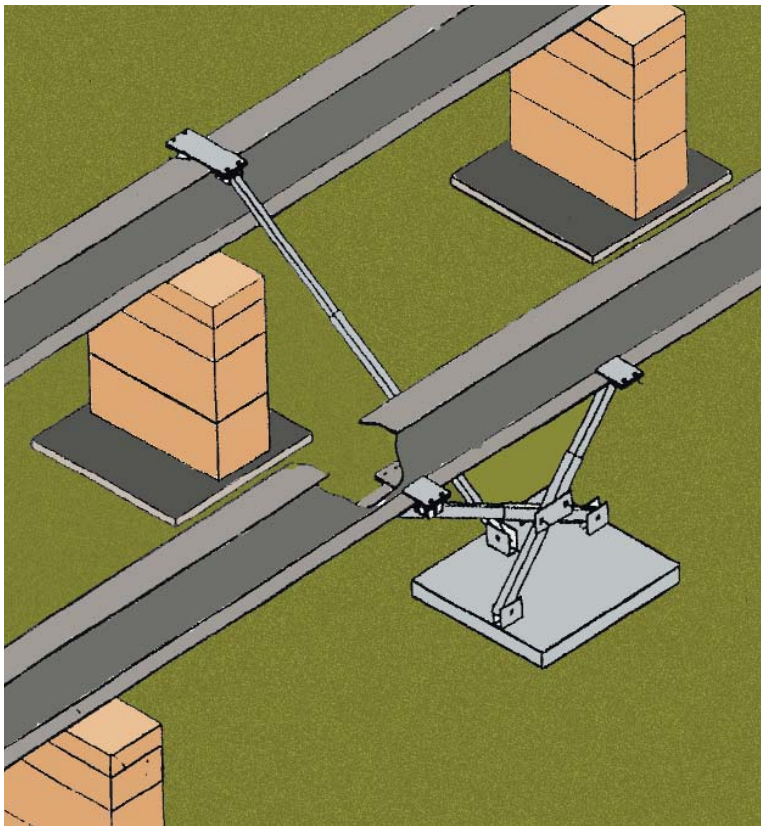

Figure 4.1 All Steel Foundation Model #1100.

The Model 1100 "V" Brace ASFS is also comprised of a 3-sq ft galvanized steel pan, but it has a V pattern that uses a 3-bolt connection, instead of telescoping arms (select 1 of the 4 correct lengths of tube, or cut and drill the tube to achieve the 40–60 degree angle). Attach two 1 ½-in. tubes to the U bracket located in the center of the pan with the

carriage bolt. Then attach the beam clamps to the frame and, using the carriage bolts, connect the tubes to the beam clamps. This results in a V configuration. The transverse arm is attached to the pan by placing tubing in a "U" bracket and a 2 ½-in. grade 2 bolt. The other end of the tube is then attached to the opposing I-beam by use of an I-beam clamp connector and a 2 ½-in. grade 2 bolt. The transverse arms are also adjustable by using a 5 ft 1 ½-in. outer tube and a 5-ft 1 ¼-in. inner tube that are also locked together with 4 Tek screws.

The Model #1100 ASFS and Model #1100 "V" Brace ASFS come in varieties that conform to all wind zone and specific state requirements.

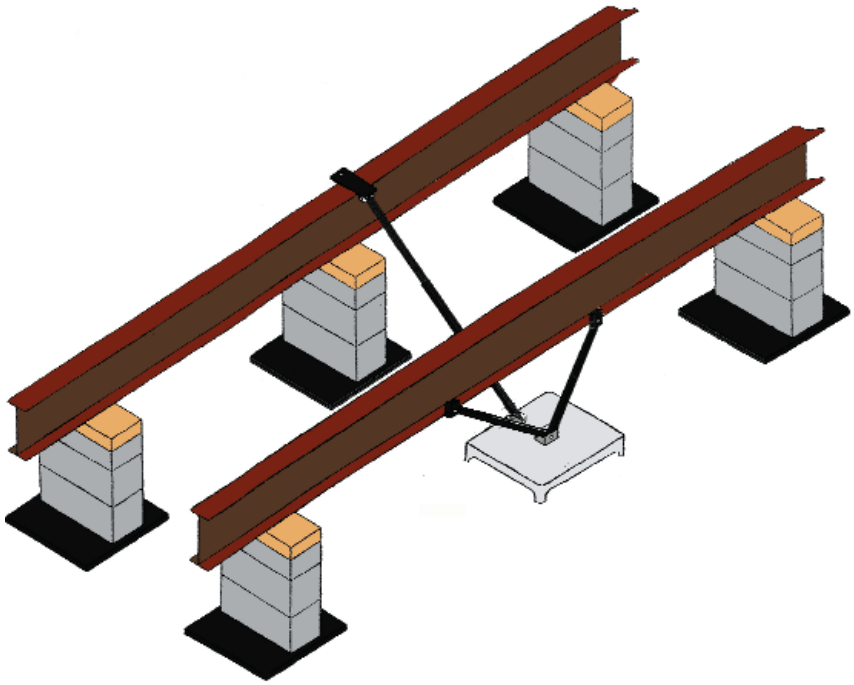

Figure 4.2 All Steel Foundation Model #1100 "V."

Both the Model #1100 and Model #1100 "V" series can be used in concrete applications.

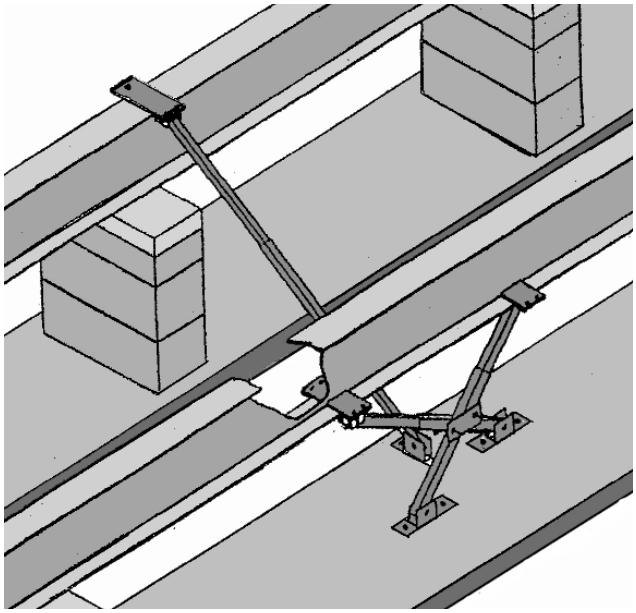

Figure 4.3 Concrete application of Model #1100.

Oliver Technologies, Inc.
P.O. Box 9
Hohenwald, TN 38462
1-800-284-7437 Toll free
(931) 796-4555 Tel.
(931) 796-8811 Fax
www.olivertechnologies.com

Initial Cost:
$ – $$

Real property foundation:
Yes

Installation time:
– ⏱⏱

Use in seismic areas:
Yes

Use in flood hazard areas:
Yes

Use in areas subject to frost heave:
Yes

Proprietary

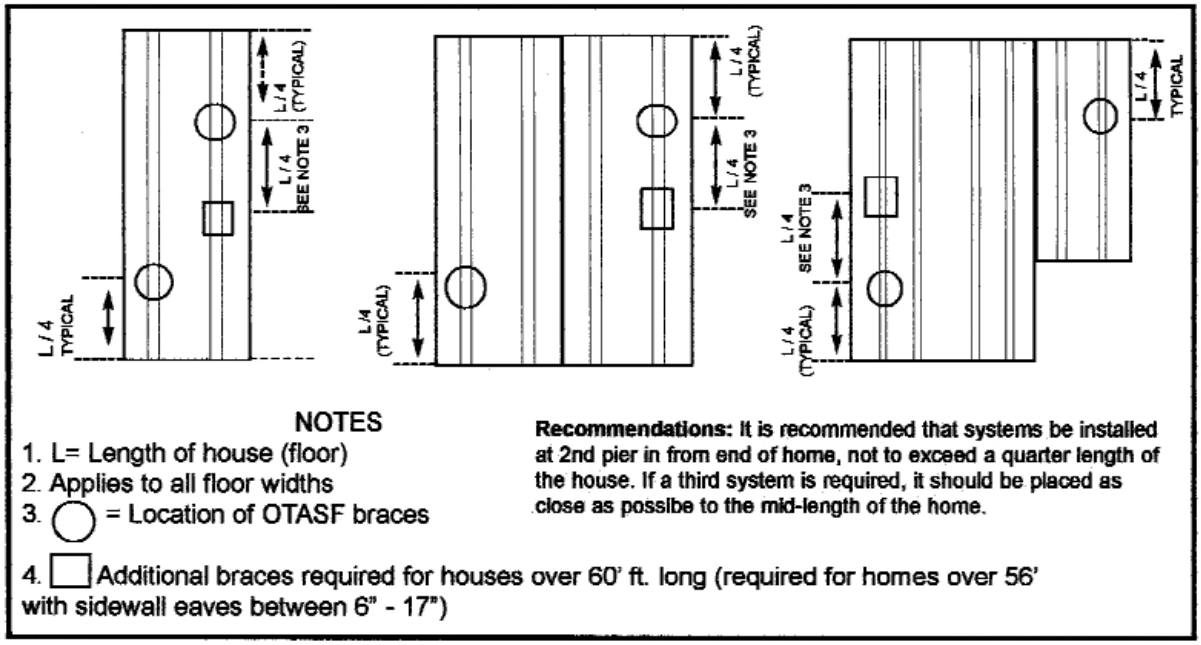

Figure 4.4 Location diagram for Wind Zone I All Steel Foundation System.

REAL PROPERTY CLASSIFICATION

The All Steel Foundation System is tested to Federal Manufactured Home Construction and Safety Standards, *Part 3280*, section 3280.305 and section 3280.306. The All Steel Foundation System's lateral and longitudinal components for poured concrete are being used across the United States for financing as a real property foundation.

INSTALLATION TIME

Installation on a 60-ft house requires only 2 systems. Estimated installation time for both systems is 40 minutes total (20 minutes per system).

WIND LOAD RESISTANCE

The All Steel Foundation System resists longitudinal and lateral wind loads.

The All Steel Foundation Systems were tested to comply with the Federal Manufactured Home Construction & Safety Standards, section 3280.305 and section 3280.306.

The HUD code defines 3 wind zones, each with loads that must be resisted by the home. In each wind zone, an uplift load is defined. The design loads are expressed in pounds per square foot (psf).

In Zone I, the maximum sustained wind speed to be resisted is 65 miles per hour (mph) resulting in a lateral wind load of 15 psf and a uplift wind load of 9 psf.

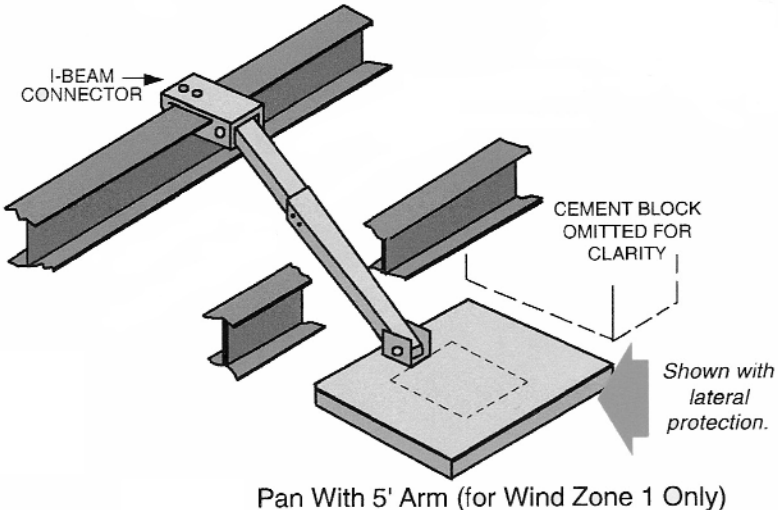

Figure 4.5 Model 1100 IT diagram.

In Zone II (coastal areas), the wind speed to be resisted is 100 mph with a lateral wind load of 39 psf and uplift wind load of 27 psf.

In Zone III (southern Florida, New Orleans area, and area around Cape Hateras, plus entire Alaska coastline), the wind speed to be resisted is 110 mph with a lateral wind load of 47 psf and uplift wind load of 32 psf.

Tests were also conducted on the home for longitudinal and lateral wind loads.

GRAVITY LOAD RESISTANCE

A test was conducted in class 4B 1000 psf soil with 150% overload factor and found to be adequate. In a wind event, the upward pitch of the roof is what gives the home uplift as the wind passes over it. With maximum code uplift, Oliver Technologies achieves its design and ultimate load (150%) with no rollover effect (moment of rollover) to the test home.

SEISMIC LOAD RESISTANCE

When using the lateral and longitudinal system together, a home would be protected for seismic loads. This is accomplished by the clamps connecting directly to the I-beam of the home.

FLOOD RESISTANCE

The system's effectiveness for flood resistance would be based on several factors; e.g., whether the pan or concrete system is used, and the length of anchors used at the shear walls.

FROST HEAVE

When installing the All Steel Foundation System in frost susceptible soil, the ground can be excavated to a depth of 6 in. and filled with coarse sand or fine gravel that will allow water to drain. This method can be done in soil conditions that don't have a high content of clay-based soil that will not allow water to drain.

INDEPENDENT TESTING

Testing was conducted by Edward M. Salsbury, P.E., consulting engineer. Testing was witnessed by a RADCO staff engineer, R.F. Tucker, P.E.

Figure 4.6 Lateral and longitudinal (rear system) protection shown under home.

The Anchorpanel® Foundation

COMPANY NAME

Fast Track® Foundation Systems

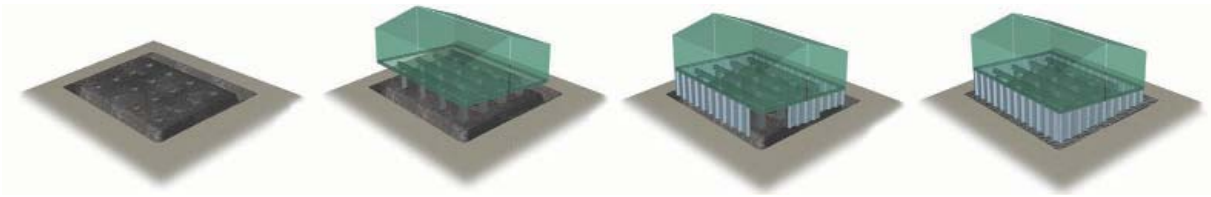

Figure 4.7 1. Prep Site 2. Set Units 3. Hang Panels 4. Place Concrete

BASIC DESIGN FEATURES

The Anchorpanel® foundation is comprised of structural panels that are attached around the perimeter of a home, and then cast into a continuous concrete footing. The result is a perimeter foundation that sustains two-story load and wind, seismic, or flood forces. Anchorpanel is, in effect, a conventional perimeter foundation.

A perimeter enclosure, which is required anyway, is efficiently utilized for all manufactured housing bracing and perimeter support requirements, saving cost in labor and materials.

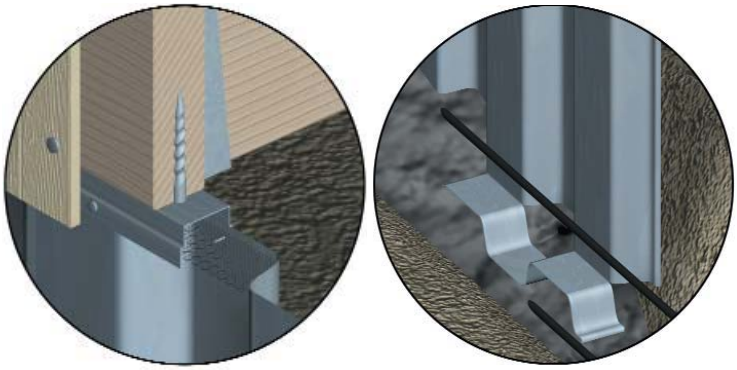

Figure 4.8 Top view Bottom view

CONSTRUCTION, INSTALLATION AND ATTACHMENT

The Anchorpanel foundation is attached to a home already set upon any interior supports (meeting the manufacturer's gravity load requirements), thereby satisfying all anchoring and perimeter-support requirements, and creating a permanent crawl space that can be backfilled against.

The heavily galvanized corrugated-steel panels are fabricated in heights to match each home installation. Panels "wrap" the home perimeter according to a simple CAD routine. Panels wrap the perimeter according to that CAD printout.

The panels have a deformation pattern of tabs and openings built into them continuously along the bottom edge which is cast into a continuous perimeter concrete footing. The tops lag-screw into the rim of the floor framing along the exterior wall line. The panels are caulked together at adjacent interlocking edges, sealing metal edges from the exterior. Ventilation is built into the panel system as needed, often as screened venting along the panel tops.

For longevity, the panel finish is typically G235 galvanizing, with a cement or tar or polymer exterior coating applied after installation; or a polymer coating applied prior to panel manufacture. Alternatively, any architectural finish, stone veneer, siding, or insulation board can be applied to the in-place panels, with adhesives, screws, or gun-nails.

Figure 4.9 The Anchorpanel foundation simply “wraps” around difficult footprints.

Trained contractors typically install Anchorpanel foundations. Please check for availability and/or opportunity.

Figure 4.10 A "kit" of panel lengths matches each installation.

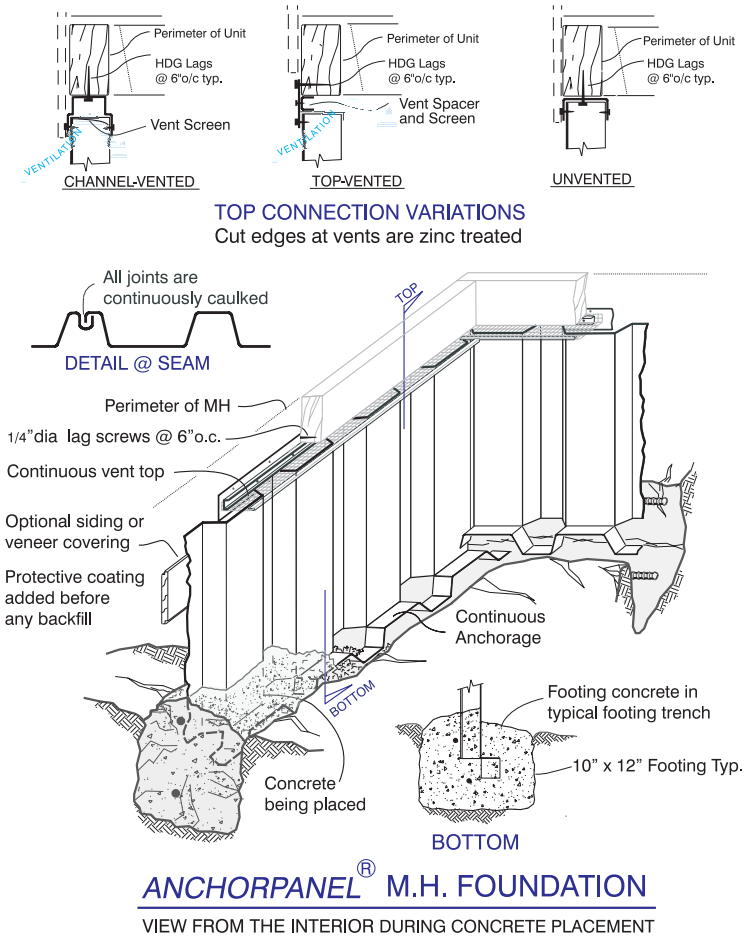

Figure 4.11

REAL PROPERTY CLASSIFICATION

Permanent Perimeter Foundation System.

The perimeter is concrete-grade beam footing. The interior supports can be prefabricated pads set coincident with the unit setup, or in-situ concrete footings. The site preparation and interior support method must meet manufacturer and foundation design requirements for a given location.

INSTALLATION TIME

Figure 4.12 Concrete added to the trench.

With a crew of two, a typical foundation takes 2 to 3 days to complete, including site prep and interior supports. The Anchorpanel perimeter can be completed in a single day, depending upon scheduling of any required inspections and the concrete delivery. Installation time can be slightly affected by architectural features or site slopes. It can be affected more by weather, site conditions, and unusual foundation design requirements.

WIND LOAD RESISTANCE

This foundation creates a solid connection to earth that resists lateral and uplift forces from wind. A continuous line of lag screw attachments stoutly anchors the manufactured home perimeter to the foundation, directly along the exterior wall lines, and also lowers the uplift forces by securely sealing off the home's crawl space perimeter. For a typical multi-wide installation of a lightweight home (18 psf), a standard Anchorpanel installation (12- x 10-in. footing, 1/4-in. diameter lags at 6-in. on center) meets wind anchorage requirements for all HUD wind zones, noting that Wind Zone III requires about one-third more footing concrete. Single-wide installations in Wind Zones II and III, or two-story units anywhere, will typically require additional fasteners and concrete. These traverse walls (only) usually have lag screws at 3 in. or 4 in. off center with footings at 15 in. +/- square.

FAST TRACK® Foundation Systems
31078 Turner Road
Fort Bragg, CA 95437
(800) 789-9694 Toll free
(707) 961-1891 Tel.
www.FastTrackFoundations.com

Initial Cost:
$ – $$

Real property foundation:
Yes

Installation time:
– ⏱⏱

Use in seismic areas:
Yes

Use in flood hazard areas:
Yes

Use in areas subject to frost heave:
Yes

Proprietary

GRAVITY LOAD RESISTANCE

The Anchorpanel foundation safely accepts gravity loads well in excess of the soil's bearing value at the base of the footing. ICBO-ER tests prove typical unvented panel axial failure values of about 20,000 per lineal foot (plf) of foundation, for panels up to 6-ft tall. Eight-foot tall panels sustained over 12,500 plf. The top-vented panels safely carry 1500 plf, as limited by the bearing strength of the manufactured home rim member in contact.

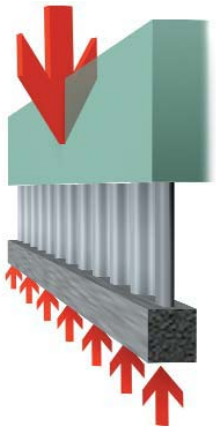

Figure 4.13

In combination with the concrete footing and the home above, Anchorpanel serves as a deep I-beam at grade, spreading concentrated loads, minimizing uneven settlement, and mitigating weaker soil conditions. By sealing off the perimeter with a permanent trenched/concrete footing it also reduces the seasonal changes in soil moisture content that lead to differential expansion. It can then be backfilled against to create surface runoff away from the foundation. For expansive soil conditions, the swelling is forced to move the perimeter footing as a unit. If conditions warrant, the adjacent interior (concrete) footing pads can dowel into the perimeter footing to avoid differential movement. For highly expansive soils, the interior supports can be built as transverse-spanning grade beams tying into the perimeter beams, forming a cost-effective two-way grid with a minimal exposure to expanding forces.

Figure 4.14 The coated panels can safely be backfilled.

SEISMIC LOAD RESISTANCE

The Anchorpanel perimeter is specifically designed to resist seismic forces and provide safe support during earthquakes. The panels exceed the strength of conventionally framed shear walls by a factor of 4. The worst-case group of ICBO-ER unvented panel tests (lowest results) withstood more than 3000 plf, indicating a safe allowable shear value of at least 1000 plf for 6-ft tall panels. These tests also showed the panels to have a deep range of ductility and energy absorption prior to ultimate failure.

The system provides strength exceeding all building code requirements for the foundation of a manufactured home or a conventional site-built dwelling. It is routinely used for low-cost foundation retrofits of two-story buildings in seismic zone 4. The number of lag screws installed generally determines the shear strength of the system, whether vented or unvented.

FLOOD RESISTANCE

The Anchorpanel foundation resists the effects of flooding erosion (scour) by virtue of its trenched-perimeter concrete footing. This footing excavation can be made deeper, if necessary, where more erosion is anticipated. The trench does not have to be filled with concrete; less expensive panel material can simply extend down further.

Since this system utilizes a solid galvanized-steel wall that sinks in water, it exhibits only negative buoyancy for panels of any height. With the required openings, it meets FEMA flood-resistant design requirements, safely supporting homes located in 100-year flood plains.

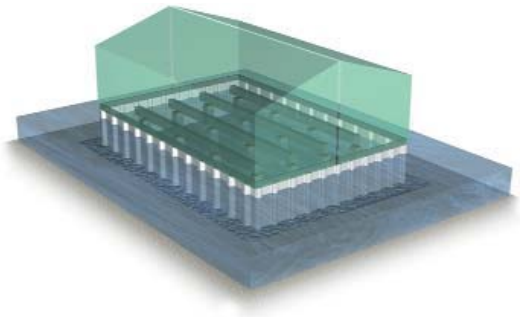

Figure 4.15

The Anchorpanel foundation offers durable flood protection by providing a continuous trenched-perimeter footing, resisting uplift by mass and grade-beam action. It continues to provide wind anchorage and lateral stability even when soils are fully saturated and significant erosion has occurred.

FROST HEAVE

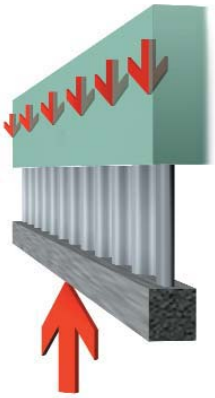

Figure 4.16

The Anchorpanel foundation can be set below local frost lines, whether frost depths are achieved by deeper trenching or by backfill methods. When the footings must be set low, the majority of the depth can be made by the panels themselves, without requiring more concrete.

For unusual frost conditions that cause a given perimeter-footing depth to exhibit frost heave at any location, the deep I-beam strength of Anchorpanel minimizes the effects of heave forces. The crawl space perimeter then provides frost stability for interior supports.

The Anchorpanel system economically complements energy-efficient "controlled ventilation" crawl space designs, being a durable substrate for insulation and cladding. Rigid insulation can extend into the footing trench, according to typical frost-protection design allowing a much shallower footing.

Figure 4.17 A durable base for stone cladding.

INDEPENDENT TESTING

The Anchorpanel system has completed a rigorous "simultaneous-combined-loads" full-scale testing protocol at an ICBO-ER listed lab facility, for use as a perimeter-foundation with unvented panels up to one story tall. This testing demonstrated the system can be used for bearing walls, (including two-story homes) in any seismic zone, for panels up to 6-ft tall, and without involving a consulting engineer. These tests meet ASTM E-72 (as modified for foundation walls).

Code Listings in place at this writing are:

- California Foundation Standard Plan Approvals 92-1F and 92-2F
- California Tiedown Standard Plan Approval ETS-128
- California Earthquake Resisting Bracing System Approval ERBS-88721

ICBO-ER: "Anchorpanel Foundation Wall" Submittal File No. 01-05-15

US Patent No. 6,076,320 and 6,205,725

Figure 4.18 Low set, vented along the top.

Figure 4.19 View site foundations (with decks) cost less.

Figure 4.20

Rigid Foundation Anchoring System

COMPANY NAME

JM Products, Inc.

JM PRODUCTS INC.

BASIC DESIGN FEATURES

The Rigid Foundation Anchoring System is made up of several components, including one design of the Deadman. It is engineered to be used throughout a wide range of soil classes. The classes range from class 4B: 270 in.-pound soils, which includes soft clay and silts; through Class 2: 550 in.-pound soils; and higher, which includes very dense sands, coarse gravel, preloaded silts, hard clays, and coral. The MinuteMan Anchors Soil Classification Chart describes these soil classes. The system may be used in soil classes 1, 2, 4,and 5 excluding SW, SP within class 4 as described by UBC. This foundation system can be used on most soils except for soils containing well-graded sands or gravelly sands with little or no fines, and poorly graded sands or gravelly sands with little or no fines.

Figure 4.22 Pivoting Deadman Foot (Driving Position) Pat. Pend.

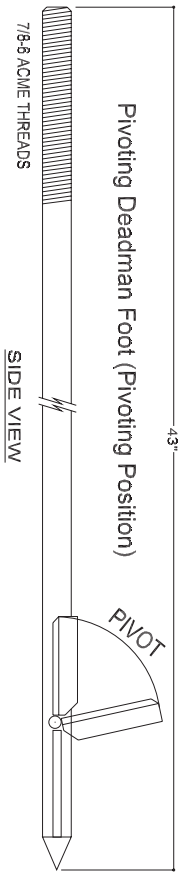

Pat. Pend.

Figure 4.21

The Deadman part of the system is a heavy 7/8-in. round steel pointed rod. The sharpened steel cutting blades welded to the base of the rod form an arrow-shaped design with a hinged pivoting foot that opens into the soil creating a "deadman" effect. The steel cutting blades cut or slice through the soil with the hinged foot following the path of the cutting blades with virtually no disturbance to the soil as it is installed.

The multidirectional stabilizer and cap assembly is an interlocking two-part system that is used to resist horizontal movement of the Deadman rod at grade level. The stabilizer plate has a 15/16-in internal diameter tube welded to the center of the plate, which slips over the 7/8-in. rod of the Deadman. This keeps the plate in contact with the rod of the Deadman at all times. The cap is a 6-in. square channel with a hole in the center that slips over the Deadman rod and locks into the top of the stabilizer plate via interlocking notches. The cap and multidirectional stabilizer, once in place, provide resistance against lateral movement of the rod at grade level.

Figure 4.23 Stabilizer Plate withCap (Side View) Pat. Pend.

The connection from the home to the Deadman is referred to as the "Strong Arm." It consists of a locking frame clamp, which is connected to the I-beam of the home, and a telescoping steel tube with pre-drilled holes at both ends. This is attached to the locking frame clamp and the tension head of the Deadman. Once pinned and locked into position, the Strong Arm transfers all loads in both compression and tension directly to the Deadman. For homes placed on floating concrete slabs, concrete slabs with frost-free perimeter footings, or concrete runners, the Deadman part of the system may not be required. The Strong Arm is designed to be used as the anchoring system where the tension head would be attached to the concrete using concrete anchor bolts and attached to the Strong Arm as described.

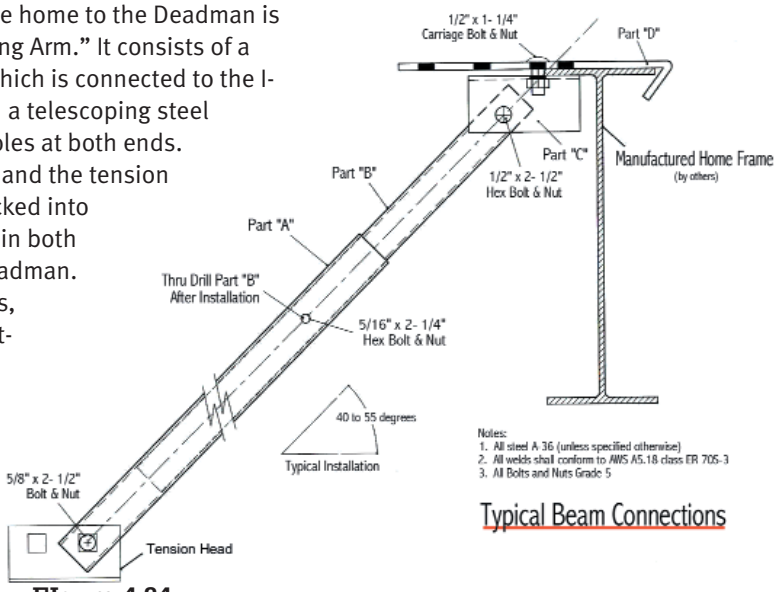

FIgure 4.24

CONSTRUCTION, INSTALLATION, AND ATTACHMENT

The Deadman is driven into the soil pneumatically by threading a jackhammer bit onto the 7/8-in. acme-threaded rod of the Deadman. It can be installed in a range from vertical to a 15-degree angle. The Deadman is driven into the soil to the point the installation bit comes in contact with the soil. The proper depth is approximately 40 in. Unscrewing the bit exposes approximately 1-in. of threads. The multi-directional stabilizer and cap is placed over the threaded rod and driven into the soil to the point the cap comes in contact with the soil. The tension head is then threaded onto the exposed threads and tightened. This draws the rod upward at approximately 4 in. of draw-back. The Deadman's pivoting foot opens into the undis-turbed soil, outside of the original cut path that was made during installation. The pivoting foot now creates a deadman effect within the soil. As the head continues to be tightened, the soil directly about the foot is compressed to form the bottom of the cone of soil shear. This provides resistance against vertical uplift. In addition, the soil directly beneath the cap is compacted around the stabilizer, which allows for greater resistance against horizontal movement at grade level. Once installed, the Deadman becomes fixed and cannot be manually removed.

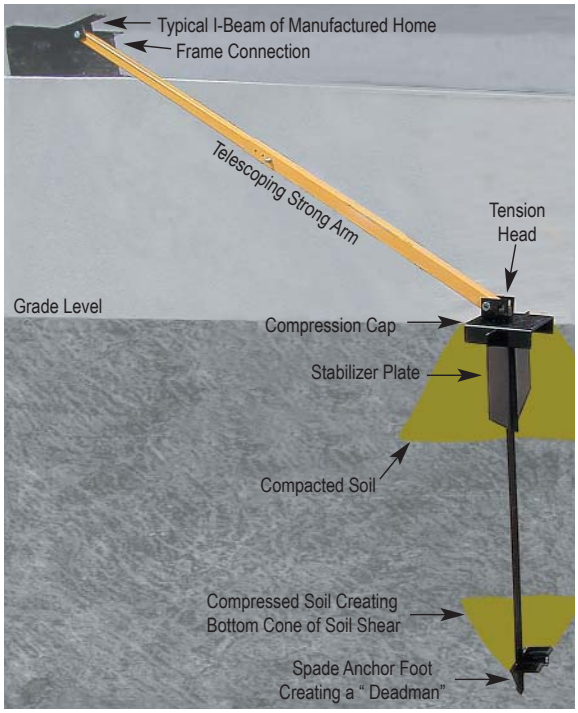

Figure 4.25

The tension head provides the connection for the tele-scoping Strong Arm to the Deadman. The Strong Arm is secured to the manufactured home frame with a locking frame clamp. The telescoping Strong Arm tube is bolted to the frame connection and telescoped down to the tension head of the Deadman and bolted in place. There is a predrilled at 5/16 in. hole in the side of the outer tube; using a drill bit, drill through the inner tube and install the bolt and nut provided at 5/16 in. x 2-1/4 in., thus locking the tele-scoping tube in place, making a rigid connection between the Deadman and the I-beam of the home. No special training is required for the installation of this system.

When longitudinal bracing is required, the telescoping Strong Arm is connected to a tension head which is attached to concrete using a concrete bolt or a ten-sion head attached to a Deadman installed directly under the I-beam of the home. The Strong Arm is telescoped up to a U-bracket (spring hanger) and thru bolted. The U-bracket is welded and pre-installed by the frame manufacturer for the purpose of attaching the under carriage that is used to transport the home. By unbolting the under carriage, the U-bracket welded to the bottom of the frame makes for an extremely strong connection for longitude bracing.

REAL PROPERTY CLASSIFICATION

The Rigid Foundation Anchoring System likely qualifies as a real property foun-dation. It has been designed and tested by three independent licensed profes-sional engineers. This system is designed to be used in conjunction with many non-proprietary foundation designs as the means of anchoring to prevent uplift, overturning, and sliding caused by wind and seismic forces. It is considered permanent when used with foundation designs that meet the guidelines for a given location.

INSTALLATION TIME

This system can be used to anchor many non-proprietary foundation designs. The installation time for 4 units on a 28-ft x 60-ft home in Elkhart, Indiana, for

JM Products
680 County Rd. 1025 East
Toledo, IL 62468
(217) 849-3172 Tel.
(217) 843-2326 Tel.
(217) 849-3225 Fax
Contacts: Mike Howard, Joe Daily
E-mail jmproducts@rr1.net

Initial Cost:
$ – $$

Real property foundation:
Yes

Installation time:
◷ – ◷ ◷

Use in seismic areas:
Yes

Use in flood hazard areas:
Yes

Use in areas subject to frost heave:
Yes

Proprietary

example, is approximately 20 minutes per unit, or a total of 1 hour and 20 minutes for the first-time installer and approximately half that time for an experienced installer. Installation time for the complete foundation would vary dramatically depending on the type of construction chosen.

Example:
A complete foundation installed in Elkhart, Indiana for a 28-ft x 60-ft home using individual concrete footers placed in the ground below the frost line, 8- x 16-in. masonry blocks or piers placed on top of the footers supporting gravity loads. The Rigid Foundation System prevents uplift, sliding, and overturning and a vinyl perimeter enclosure was installed. This type of foundation design could be achieved in one day.

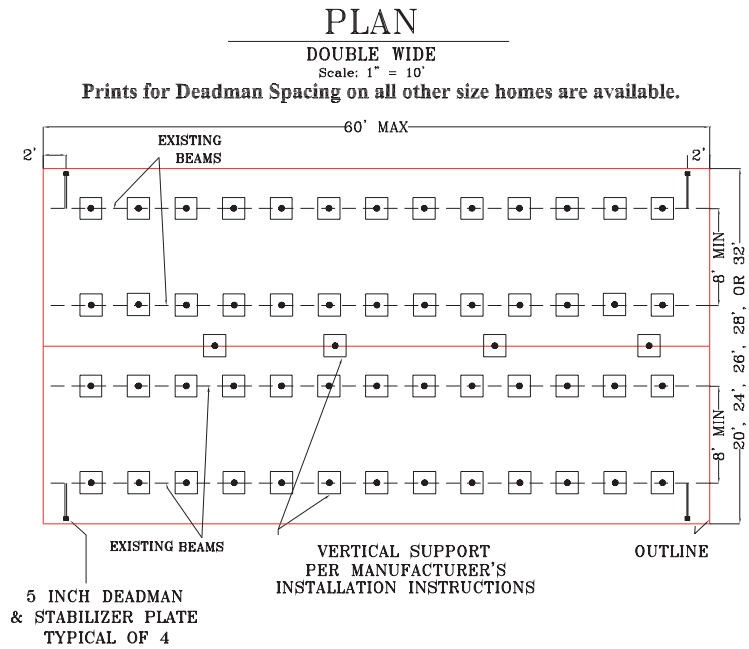

Figure 4.26

WIND LOAD RESISTANCE

Wind load resistance is achieved with a rigid tube connected to the I-beam of the home that protrudes down and is attached to a Deadman embedded in the soil. The Deadman has an attached stabilizing device at the upper part of the rod, which resists forces that may be applied in both tension and compression. All lateral force is transferred directly to the rod of the Deadman. Resistance against vertical uplift, as required by HUD, is achieved with the rigid tube connected to the I-beam of the home and extending down to a Deadman in the soil. Every anchor point resists movement in all directions as pressure is applied. Load tests performed on the Strong Arm and components by a licensed independent testing laboratory have proven the system to resist an average of 10,666 pounds before failure; these results are 3.39 times greater than the minimum requirements of HUD. The Deadman part of the system has been tested for vertical and horizontal movement in soil conditions classified by Tharp and Associates to be clayey sand with some silt and classed per UBC to be between a 4 and 5 soil type. The Deadman was tested and performed 1.75 times greater than the minimum load resistance required by HUD. The ultimate pullout capacity achieved was 10,000 pounds with no visual damage to the system.

Note that the tests indicated were performed in a representative range of soils for Deadman installation. With this in consideration, when the Deadman system is installed in soils with higher sheer strengths, the resistance against vertical uplift and lateral movement during wind loads increase tremendously.

The system is designed to be used on homes placed in all wind zones. Wind Zones II and III require additional units to be used depending on the size of home. All engineering prints and calculations are available at customers' request for homes being placed in these zones.

Vertical ties are necessary to comply with HUD's requirements for use in Wind Zones II and III. This system allows for the use of vertical ties without any additional equipment.

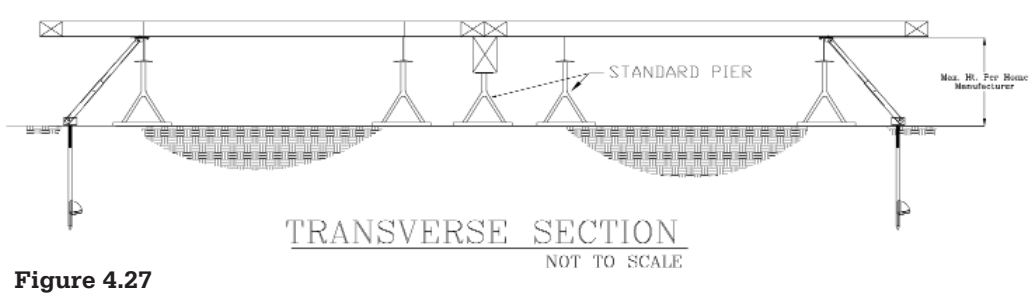

Figure 4.27

GRAVITY LOAD RESISTANCE

The Rigid Foundation Anchoring System is designed to prevent uplift, overturning, and sliding caused by wind or seismic forces. Although the system is capable of supporting some vertical load, it has not been designed to completely support the home. Gravity loads should be supported by footings and piers required by the home manufacturer and state agency having jurisdiction.

SEISMIC LOAD RESISTANCE

The calculations of the seismic design load for the Rigid Foundation System were based on the 1997 Uniform Building Code (UBC), Chapter 6. The seismic load was calculated using the Simplified Design Base Shear method (Section 1630.2.3) for Seismic Zone 4 for a Near Source Factor of N_a=1.3. This corresponds to the worst-case scenario for the United States.

FLOOD RESISTANCE

The Rigid Foundation Anchor System is suitable for use in flood plain areas when FEMA-recommended designs are utilized and whereby the anchoring system resists flotation, the floor level is set above the base flood elevation, and the home is not set in a floodway.

FROST HEAVE

In areas where frost heave is an issue, individual concrete footers could be used. The footers should extend below the maximum frost penetration and piers should be placed on top of the footers to support the gravity loads of the home. Footer and pier locations should be placed per home manufacturer specifications. The Deadman part of the Rigid Foundation Anchoring System is a type of a ground anchoring device. HUD requirements state that ground anchors should be embedded below the frost line. The length of the Deadman should be considered when installing in frost-prone areas.

In areas where the frost line extends below the installation depth of the Deadman, a properly insulated perimeter enclosure should reduce the frost heave exposure under the home.

INDEPENDENT TESTING

Independent testing has been performed by:

- Professional Design Group Inc., Mike Alexander, P.E.
- Donald Tharp and Associates, P.E.
- CTC Certified Testing Consultants, P.E.
- Pacific Consulting Services, P.E.
- Geotechnology, Inc., Mat. Testing Div., Licensed Materials Eng.
- Bowers Professional Engineer Services, registered P.E.

Third-party engineering analysis has been performed by:

- Professional Design Group Inc., Mike Alexander, P.E.
- Pacific Consulting and Engineering Service Registered P.E.
- Donald Tharp and Associates, P.E.

State Approvals:
Missouri, Illinois, Kentucky, Arkansas, Texas, California, Nevada, Arizona, Colorado, Washington, Oregon, Utah, and Idaho. Many states do not have approvals for anchoring systems, but require a system to be approved by the home manufacturer. Many home manufacturers have approved the use of this system, and additional approvals are anticipated.

The Storm Anchor® System

COMPANY NAME

The Anchor Post Company, L.L.C.
1150 Hungryneck Blvd. • Suite C-346 • Mt. Pleasant, S.C. 29464

The Anchor Post Company, LLC.

The mission of the Anchor Post Company, LLC, is to mitigate disasters as they relate to life and property through the manufacturing and marketing of affordable foundation anchoring systems.

BASIC DESIGN FEATURES

The Storm Anchor® (U.S. Patent #6347489B1) is a permanent support column that replaces blocking and anchoring devices for manufactured homes (**Figure 4.28**). As shown in **Figure 4.29**, the Storm Anchor is designed to fasten to standard I-beam flanges that vary in width from 2-¾ to 3-½ in. For beam flange widths outside of this range, the Anchor Post Company fabricates a comparable cap plate to make the connection. The Anchor Post Company also manufactures the Anchor Post®, which has an adjustable cap plate system to be used on marriage walls. The Storm Anchor has an adjustable cap plate that can be positioned to within 1/16 of an inch of the desired elevation. Once the installation is complete, rotation of the cap plate is restricted, eliminating the possibility of unintentional changes in the height.

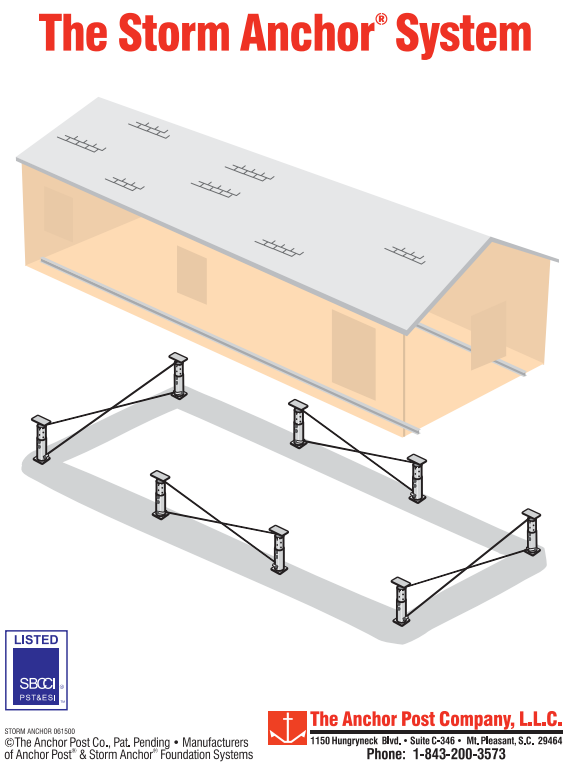

Figure 4.28 The Storm Anchor system.

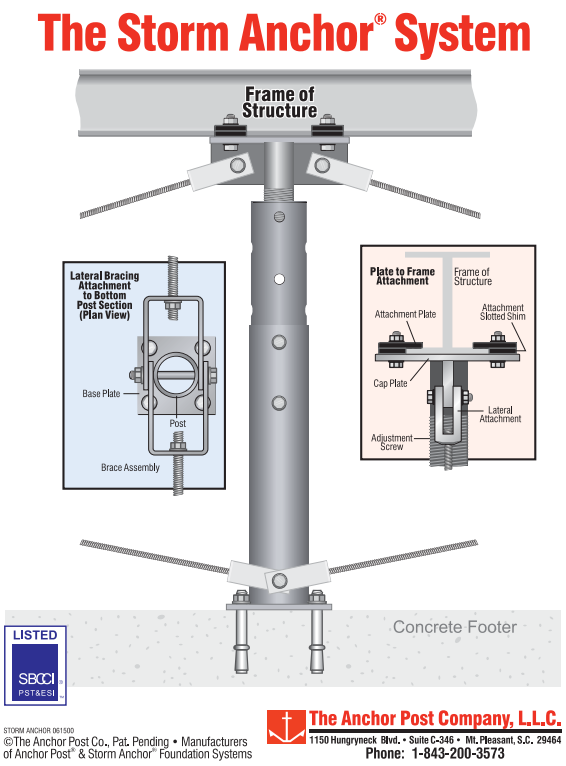

Figure 4.29 Storm Anchor details.

The forces resisted by the Storm Anchor system are transferred to properly designed concrete footings. The choice of a particular concrete foundation is discretionary based on many factors as outlined in Chapters 2 and 3 of this guide. As such, the factored loads, that the Storm Anchor can resist are symbiotic with and interdependent on the footing design.

Typically, isolated square concrete footings are used in lower wind regions that have a significant frost depth. **Figure 4.30** shows a typical footing section for a manufactured home in northern Indiana. Larger continuous footings are used in coastal areas and are sized to resist overturning forces. **Figure 4.31** shows a typical footing section for a manufactured home in central South Carolina. It should be noted that the footing thickness, amount of reinforcing steel, and typical details are based on minimum requirements outlined in *Building Code Requirements*

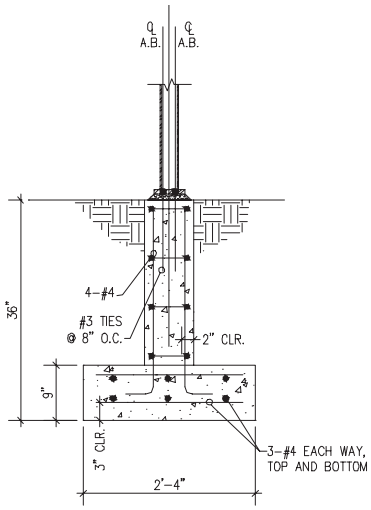

Figure 4.30 Typical isolated footer in northern Indiana.

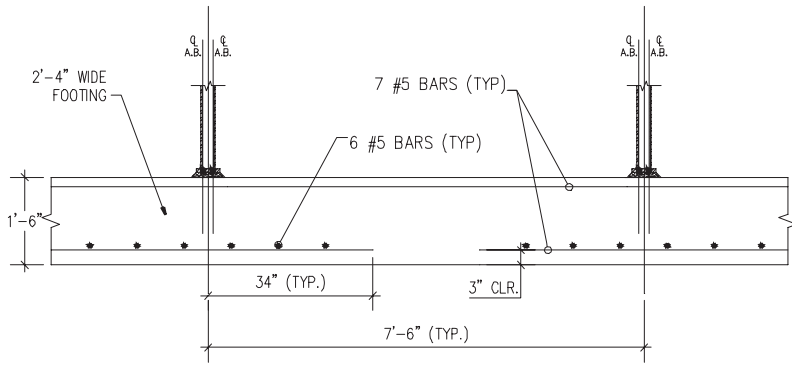

Figure 4.31 Typical continuous footer in central South Carolina.

for Structural Concrete with Commentary, *ACI 318-99*. These provisions are not necessarily required for all manufactured home foundations, but they do represent good practice. Individual footings for a given manufactured home are designed on a case-by-case basis.

The maximum allowable loads that can be resisted by the Storm Anchor system depend on the number of posts and braces used for the particular unit. Only certain units need to be cross-braced, per HUD requirements. Limiting values were obtained by testing using a factor of safety of 4.0 and are expressed as allowable loads in **Table 4.1**. Each independent unit (anchor) can resist the following allowable loads:

Table 4.1: The Storm Anchor Allowable loads as provided by SBCCI Report No.: 2149

Height	Vertical	Lateral	Uplift
≤ 45"	12.7 k	3.1 k	4.7 k
45–51.375"	10.7 k	3.1 k	4.7 k

CONSTRUCTION, INSTALLATION, AND ATTACHMENT

The design, digging, and pouring of the chosen concrete footing should all be completed by the time the manufactured home is delivered. As an example, the footings would have been prepared as shown in **Figure 4.30** for a manufactured home in Northern Indiana. At a minimum, it is important to install the Storm Anchor system in accordance with the spacing guidelines provided in each manufactured home's installation manual. However, the Storm Anchor system has been optimized to most efficiently resist loading when the posts are spaced at 8 ft center or closer. The actual spacing depends on the manufactured home dimensions, soil conditions, and design lateral loading.

To install, the manufactured home is placed on the footing by a toter or other means. Any final corrections of the home's position may be accomplished by a rolling and jacking set.

The Anchor Post Company, LLC
1150 Hungryneck Blvd.
Suite C-346
Mt. Pleasant, SC 29464
(843) 200-3573 Tel.
Contact: Tim Hushion
www.anchorpost.com

Initial Cost:
$ – $$

Real property foundation:
Yes

Installation time:
◷ – ◷◷

Use in seismic areas:
Yes

Use in flood hazard areas:
Yes

Use in areas subject to frost heave:
Yes

Proprietary

After being moved into final position, the floor must be temporarily supported while the running gear is removed. This can be accomplished in many acceptable ways, but the most common way is to use jacks and shoring next to every support point. The attachment is made by using the accompanying friction clamps and torque to 175 ft-lbs. Since the structural floor beam is jacked at only a few locations, slight deflection may occur at various points where the Storm Anchor is being placed. This deflection can be corrected by using jacks near the Storm Anchor placement until completion.

The base of the Storm Anchor is attached to the concrete utilizing ½-in. wedge anchor bolts drilled into the footer. The adjustable head of the Storm Anchor aids in making final adjustments in 1/16 in. increments.

The temporary jacks and shoring are removed, additional posts are placed under the door and window openings as required by the manufacturer, and exterior skirting is applied to the homeowner's desire.

This should take two people no longer than 1 day, excluding the concrete footing, which can be estimated to take about 2 days.

REAL PROPERTY CLASSIFICATION

The Storm Anchor system is a real-property foundation system. Lindbergh and Associates has determined that the Storm Anchor system can resist loading requirements beyond the minimum established loads. The structural components making up the Storm Anchor system have been designed as a combination of braced frames and pin-pin columns to resist the design gravity, uplift, overturning, and lateral loading conditions described in ASCE 7-98 and the AISC *Manual of Steel Construction,* where applicable. This meets all known requirements for a permanent foundation and has been recognized as such by mortgage lenders in South Carolina.

INSTALLATION TIME

In almost all cases, the installation time is faster than that of the conventional anchoring systems currently utilized. Under normal conditions, installation should take no longer than 1 day for two people, in regard to the setting of the anchors themselves.

WIND LOAD RESISTANCE

The configuration of braced posts and pin-pin posts is determined on a case-by-case basis. For high wind regions, more posts are required to resist overturning forces, and more braces are required to resist lateral forces put on the system. Likewise, the higher the wind loads are in a given region, the thicker the concrete footers or more steel reinforcement must be. The Storm Anchor system has been optimized to resist wind loads between 90 and 160 mph (3 second gust wind speeds). Nevertheless, the continuous concrete footers are required to resist the overturning loads put on the system.

GRAVITY LOAD RESISTANCE

As with wind loading conditions, the Storm Anchor system posts can be spaced to adequately resist extremely high loading conditions. For practical purposes, a maximum spacing of 8 ft on center has been recommended to prevent premature buckling of a post when overturning compression is combined with gravity loads. For dead and live loads only, the system can resist an allowable load of 220 psf.

Although the Storm Anchor system can satisfactorily perform in soils that shrink and swell appreciably because of changes in soil moisture content, the system is not recommended for use with expansive soils unless an engineer has determined that the manufactured home itself can tolerate the significant relative displacements along the length of the I-beams.

SEISMIC LOAD RESISTANCE

Lindbergh & Associates performed the calculations to show that the Storm Anchor system could resist the highest level seismic loading given in the International Building Code 2000. As with wind design, the spacing of the bracing depends on the level of seismic loading. Although the Storm Anchor can be used for all site classes identified in the International Building Code 2000, special foundation ties may be required for structures classified as Seismic Design Category D or higher.

FLOOD RESISTANCE

As a minimum, The Anchor Post Company recommends that the homeowner elevate his or her home above the base flood elevation defined for the 100-year flood. This can be easily accomplished in most cases by using the Storm Anchor system. For flood waters that exceed this level, Lindbergh & Associates has determined that the Storm Anchor system can resist a buoyancy force of 1.75 kips per post or 63 kips total vertical load. This load is limited by the weight of the concrete footings. Although impractical to build, utilizing enough concrete to match post strengths will allow for a total vertical load of 252 kips. It is important to note that the posts are not specifically detailed to resist significant lateral loads placed on the posts by debris and floating structures that may impact the system during a significant flood event. The Storm Anchor system can be used to elevate manufactured homes 36-½ to 51-$^{3}/_{8}$ in. above grade. The Storm Anchor system uses a special "bottom post section" to accommodate lower elevations when desired. The maximum height for the Storm Anchor is 51 $^{3}/_{8}$ in. above grade. The system has been designed for floodwater velocities of 10 ft/s.

FROST HEAVE

It is recommended that the bottom of the concrete footings be set at or below the frost depth. This is the primary means of compliance with the *International Building Code 2000*.

INDEPENDENT TESTING

SBCCI Public Safety Testing and Evaluation Services, Inc., Report # 2149. According to this report, the Storm Anchor meets the requirements of the following codes: *Standard Building Code*, *Florida Building Code-Building*, *International One and Two Family Dwelling Code, and International Residential Code or Supplements.*

Anchor Post and Storm Anchor Design and Detailing Report, Charles Lindbergh & Associates, Project No. L&A 20019, May 7, 2001, Timothy Wayne Mays, PhD, EIT, and Charles Lindbergh, PhD, P.E.

Report of Mechanical Testing, prepared by Professional Services Industries, Inc., Report No. 138-18025-1, April 11, 2001, Chris Lopez, P.E.

Vector Dynamics Foundation System

COMPANY NAME

Tie Down Engineering

BASIC DESIGN FEATURES

One aspect of the Vector's performance relates to the tension that is created from the base pad to the beam, which prevents blocks from sliding and toppling. Vector is installed on the inside beams of multisection homes, reinforcing the lagging between the sections of a multisection home via the diagonal crossties. The combination of the tension from the strapping, the center compression member, the floor system, and the vertical supports forms a rectangle that keeps the home and system "in square" under wind loads. By adding the hardware and longitudinal struts from the base pad to the beam, increased protection is quickly added to protect against winds on the ends of the home. Vector Dynamics can be used to retrofit existing homes.

REAL PROPERTY CLASSIFICATION

The Vector Dynamics lateral and longitudinal components for poured concrete are being used across the United States for meeting the conditions for real property financing.

INSTALLATION TIME

The installers using Vector estimate approximately 20 minutes per system, for a total of 1 hour for the 28- x 70-ft home.

WIND LOAD RESISTANCE

The Vector system uses the building structure to transfer pier loads into foundation pads. The wind loads are transferred from the wind side of the home through diagonal crossties to the opposite lee side foundation pads. As wind loads increase, lee-side pier forces also increase, which increases the Vector pads' (lee-side) resistance to horizontal movement. The design of Vector makes it extremely "retro-fit" friendly because the set/level of the home is

Figure 4.32 May 2001—Texas Tech University, U.S. Department of Energy, and U.S. Department of Housing and Urban Development "overstressed" a single section manufactured home and its Vector Dynamics foundation with 110 mph windgusts from the propwash of a C130 aircraft in Lubbock, Texas.

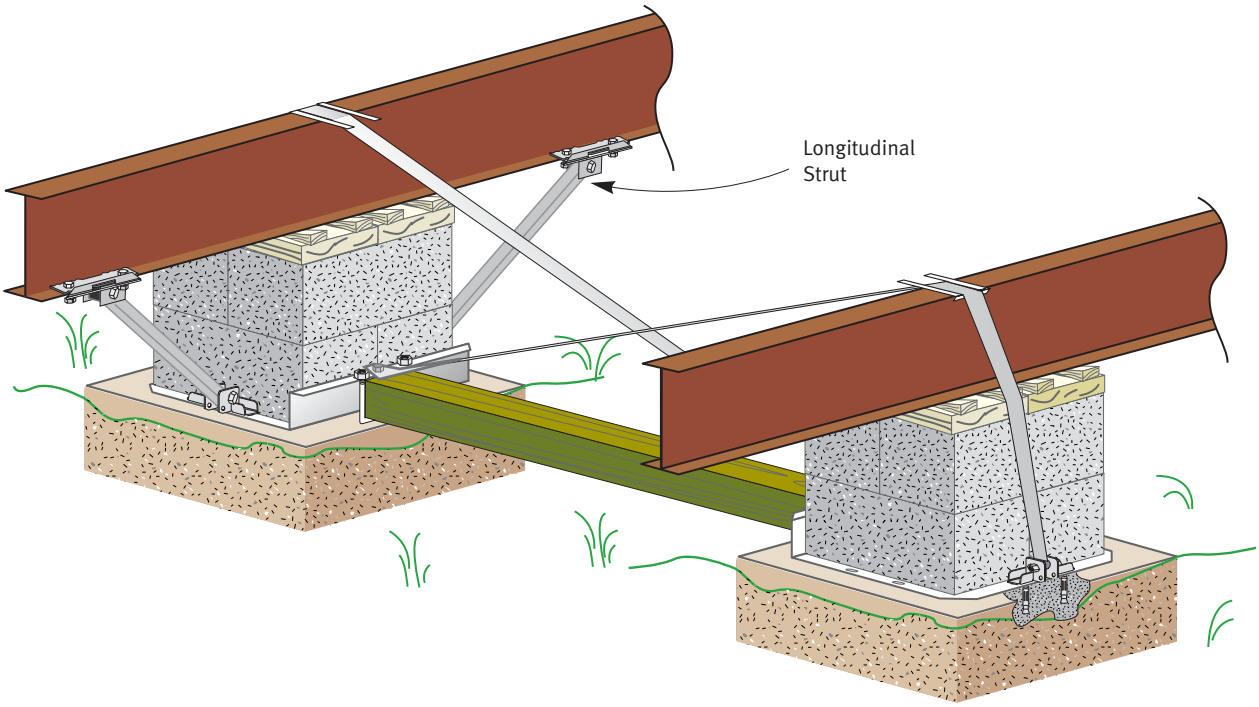

Figure 4.33 Vector Dynamic's lateral and longitudinal components for poured concrete.

not disturbed. Likewise, the use of Vector in communities eliminates the uncertain nature of driving anchors near possible underground utility lines, when one home is removed and another replaces it. The major components of Vector can be transported with the home to its new site, or can be installed on the home that replaces it.

Vector is designed for use in all HUD-designated Wind Zones.

No special method or equipment is necessary to install Vector properly.

GRAVITY LOAD RESISTANCE

Each galvanized Vector pad provides either 2 or 3 sq ft of bearing surface, thus providing an appropriate amount of gravity load resistance for the applicable soil conditions at the Vector piers, which are used to support the home.

Because Vector has been tested in extremely soft soils and the installation instructions are based accordingly, there is no adjustment required for soil conditions, with the exception of Class V soil. The Vector instructions for Class V soil are slightly more demanding than those for other soil conditions, in that vertical ties are added.

Assuming that proper support for the soil bearing capacity has been provided, Vector Dynamics can be used in both expansive and non-expansive soils.

SEISMIC LOAD RESISTANCE

When the lateral and longitudinal components of Vector are used together, the home is protected against seismic loads. By reinforcing the lagging between sections, and by creating tension from the base pad to the beam, Vector prevents the home from rotating off of the piers.

TIE DOWN ENGINEERING
5901 Wheaton Drive
Atlanta, GA 30336
1-800-241-1806 Toll free
(404) 344-0000 Tel.
(404) 349-0401 Fax
www.tiedown.com

Initial Cost:
$ – $$

Real property foundation:
Yes

Installation time:
– ⏲ ⏲

Use in seismic areas:
Yes

Use in flood hazard areas:
Yes

Use in areas subject to frost heave:
Yes

Proprietary

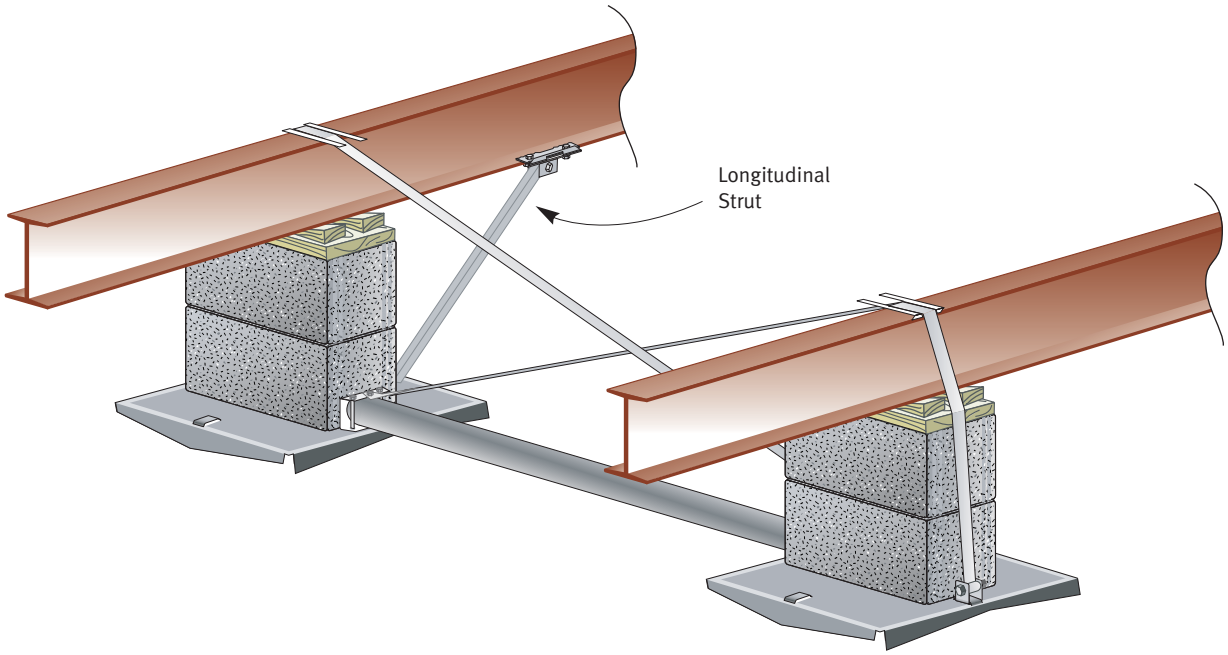

Figure 4.34 Ground set vector dynamics with lateral and longitudinal components.

FLOOD RESISTANCE

The ability of the concrete Vector system to resist loads associated with flooding depends upon the volume of concrete used in the foundation/Vector piers. For the ground-set Vector, the depth of anchors used and the method of installation would determine the effectiveness of that system in resisting flood loads.

FROST HEAVE

Regardless of whether the concrete or ground-set version of Vector is used, a properly insulated perimeter enclosure would eliminate the frost heave issue in all but the most severe freezing areas. The concrete version of Vector, when the footers are at proper depth for the area's requirements, will be unaffected by frost heave whether skirted or not.

INDEPENDENT TESTING

State approvals:
Alabama, California, Florida, Idaho,
Illinois, Michigan, Minnesota, Missouri, Nevada, New Mexico, North Carolina, Tennessee, Texas, Utah

Design Listing #101, RADCO
Design Listing #102, RADCO
Test Reports: See **Table 4.2**

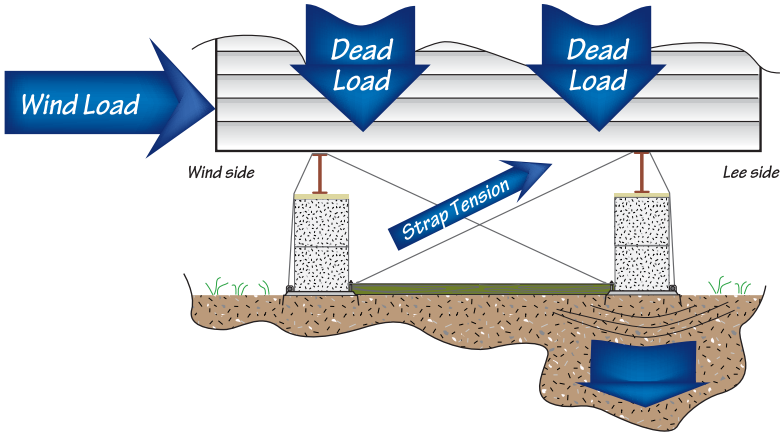

Figure 4.35 The dynamics of the Vector system.

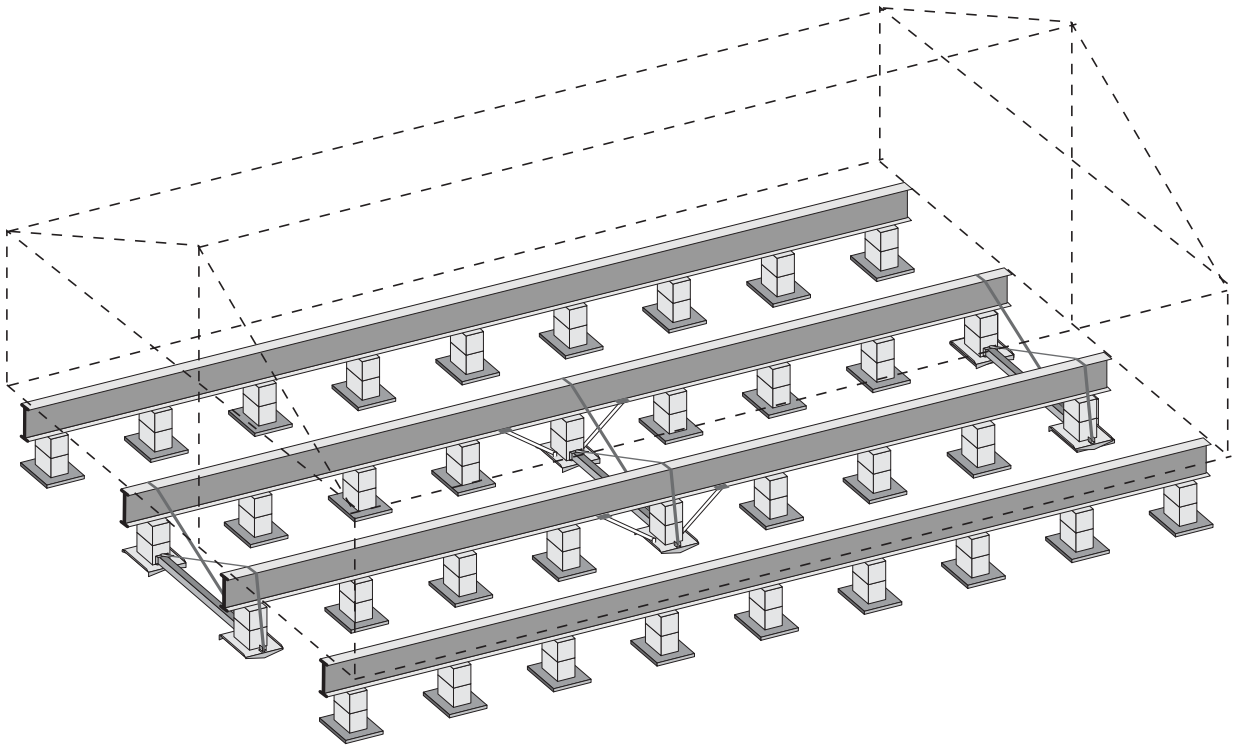

Figure 4.36 28- x 70-ft home with lateral and longitudinal components.

Table 4.2 **Vector Dynamics Test Reports**

Test Identification	Wind Zone	Soil Class	Ground	Concrete	Lateral	Longitudinal
Wiss, Janney, Elstner, WJE No. 971061	1, 2, 3	3, 4, 5	X		X	
RADCO, Inc., RAD-2134	1, 2, 3	3	X	X	X	
Professional Design Group—6/10/98	1, 2	5	X		X	
K2 Engineering, Inc., 99-MH03-TDE	2 ,3	4B, 5	X		X	
K2 Engineering, Inc., 99-MH04-TDE	1, 2, 3	4B	X			X
K2 Engineering, Inc., 99-MH13-TDE	1, 2, 3	4B		X	X	
K2 Engineering, Inc., 00-MH02-TDE	N/A	1,000 psf 3,000 psf	X			
K2 Engineering, Inc., 00-MH03-TDE	1	4A		X	X	
K2 Engineering, Inc., 00-MH04-TDE	1	4A	X		X	
K2 Engineering, Inc., 00-MH17-TDE	N/A	4A	X			
K2 Engineering, Inc., 00-MH20-TDE	1, 2, 3	4B	X			X
K2 Engineering, Inc., 00-MH21-TDE	N/A	N/A			X	
K2 Engineering, Inc., 01-MH04-TDE	1	4A	X		X	
K2 Engineering, Inc., 00-MH22-TDE	1, 2, 3	asphalt			X	
K2 Engineering, Inc., 01-MH15-TDE	1, 2, 3	4B	X			X
K2 Engineering, Inc., 01-MH18-TDE	1, 2, 3	N/A		X		X

Xi Foundation System

COMPANY NAME

Tie Down Engineering

BASIC DESIGN FEATURES

The performance of the Xi system relates to the tension and compression loads that are transferred from the base pad at one pier to the opposite beam. By adding the hardware and longitudinal struts from the base pad (under a concrete block pier) to the beam, increased protection is quickly added to protect against winds on the ends of the home. In higher wind zones, the concrete block pier can be substituted with the Xi galvanized, adjustable pier system that also provides longitudinal resistance. The Xi system can also be used to retrofit.

REAL PROPERTY CLASSIFICATION

Tie Down's Xi base modification can be used on poured concrete for financing as a real property foundation.

INSTALLATION TIME

Installers who have been routinely using the system estimate approximately 20 minutes per system, for a total of 40 minutes for the 28- x 60-ft home.

WIND LOAD RESISTANCE

The Xi system uses the rigidity of the strut to transfer wind loads into foundation pads. The wind loads are transferred from the wind side of the home via the strut to the opposite lee-side beam or base pad. As wind loads increase, lee-side pier forces also increase, which increases the Xi pads' (lee-side) resistance to horizontal movement.

The Xi system is designed for use in all wind zones.

No special method or equipment is necessary to install Xi properly.

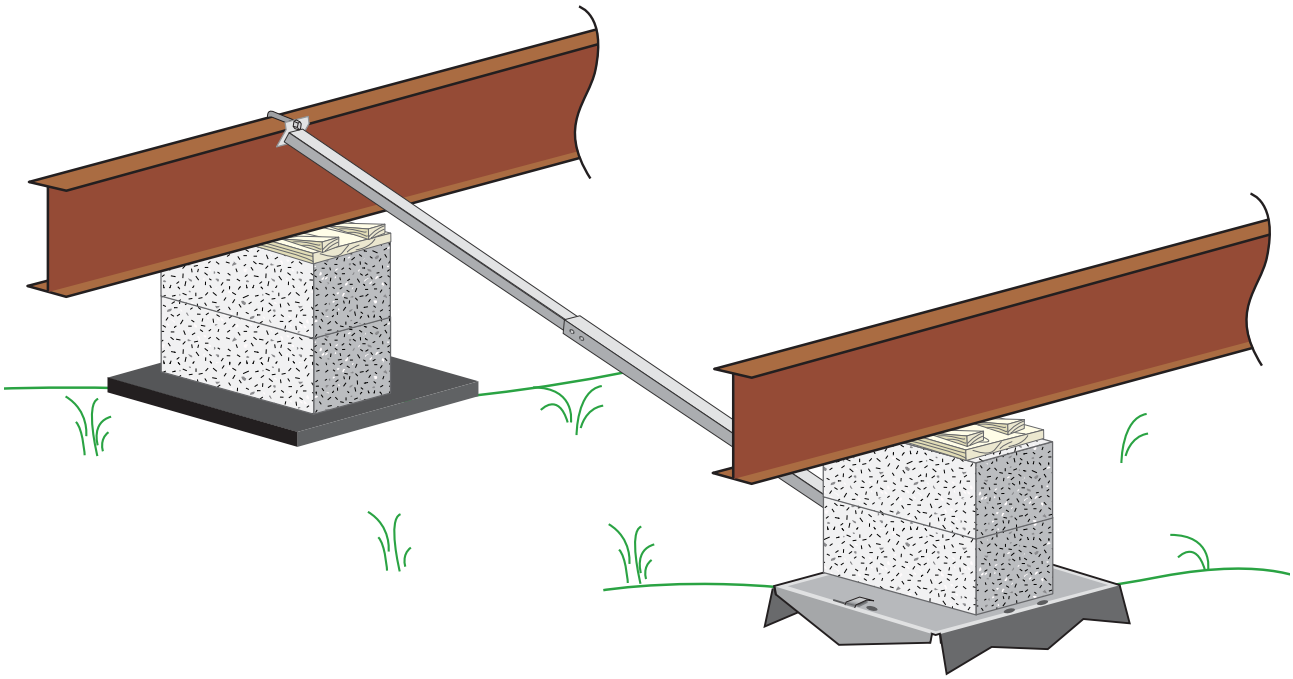

Figure 4.37 Wind Zone 1 with concrete pier lateral system.

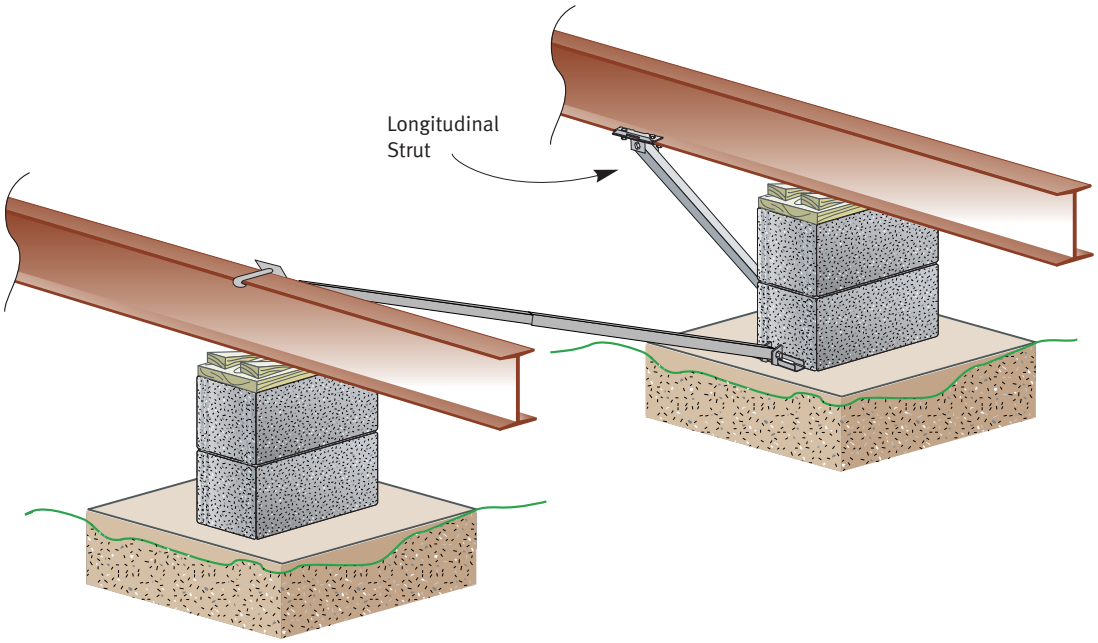

Figure 4.38 Xi for poured concrete, lateral and longitudinal systems.

GRAVITY LOAD RESISTANCE

Each galvanized Vector/Xi pad provides 3 sq ft of bearing surface. Gravity load resistance at the Xi piers, which are used to support the home, is 3,000 lbs of support in 1,000 psf soil, and 6,000 lbs of support in 2,000 psf soil, etc.

Because Xi has been tested in extremely soft soils and the installation instructions are based accordingly, the 3-sq ft Vector/Xi pads work in all soil classifications (including I, II, III, IV, and V).

The Xi system performs equally well in both expansive and non-expansive soils when proper support for the soil-bearing capacity has been provided.

SEISMIC LOAD RESISTANCE

When the lateral and longitudinal strut components of the galvanized steel Xi pier system are used together, the home is protected against seismic loads.

FLOOD RESISTANCE

The capacity of the concrete Xi system to resist loads associated with flooding depends upon the volume of concrete used in the foundation/Vector piers. For the ground-set system, in flood areas, anchors may be required to supplement the system in resisting flood loads.

NOTE: Vertical ties are preferable over diagonal ties in flood-prone areas.

FROST HEAVE

Regardless of whether the concrete or ground-set version of Xi is used, a properly insulated perimeter enclosure would eliminate the frost heave issue in all but the most severe freezing areas. The concrete version of Xi, when the footers are at proper depth for the area's requirements, will be unaffected by frost heave, whether skirted or not.

TIE DOWN ENGINEERING
5901 Wheaton Drive
Atlanta, GA 30336
1-800-241-1806 Toll free
(404) 344-0000 Tel.
(404) 349-0401 Fax
www.tiedown.com

Initial Cost:
$ – $$

Real property foundation:
Yes

Installation time:
◷ – ◷ ◷

Use in seismic areas:
Yes

Use in flood hazard areas:
Yes

Use in areas subject to frost heave:
Yes

Proprietary

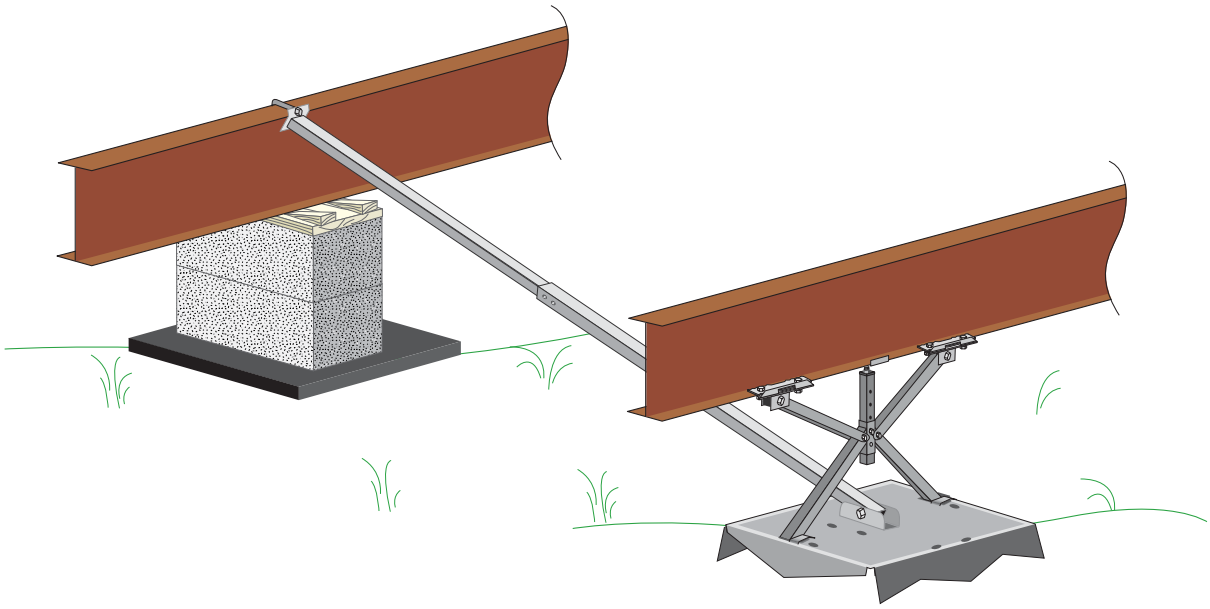

Figure 4.39 Xi Wind Zone 1, 2 or 3 with lateral strut and steel Xi (longitudinal) pier.

INDEPENDENT TESTING

State approvals:
Alabama, Florida, Missouri, North Carolina, Tennesee, Nevada (more pending as of 3/1/02)

Test Reports: K2 Engineering 01-MH02-TDE
K2 Engineering 01-MH03-TDE
K2 Engineering 01-MH13-TDE
K2 Engineering 01-MH15-TDE

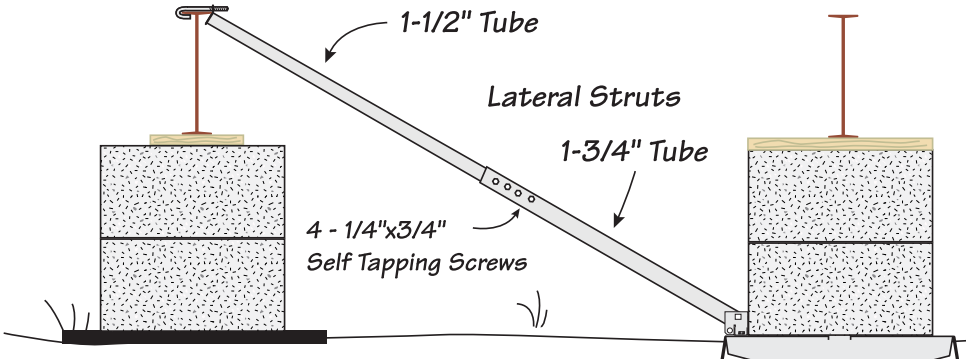

Figure 4.40 Xi lateral strut attaches to one base pad and adjusts to attach to opposite beam.

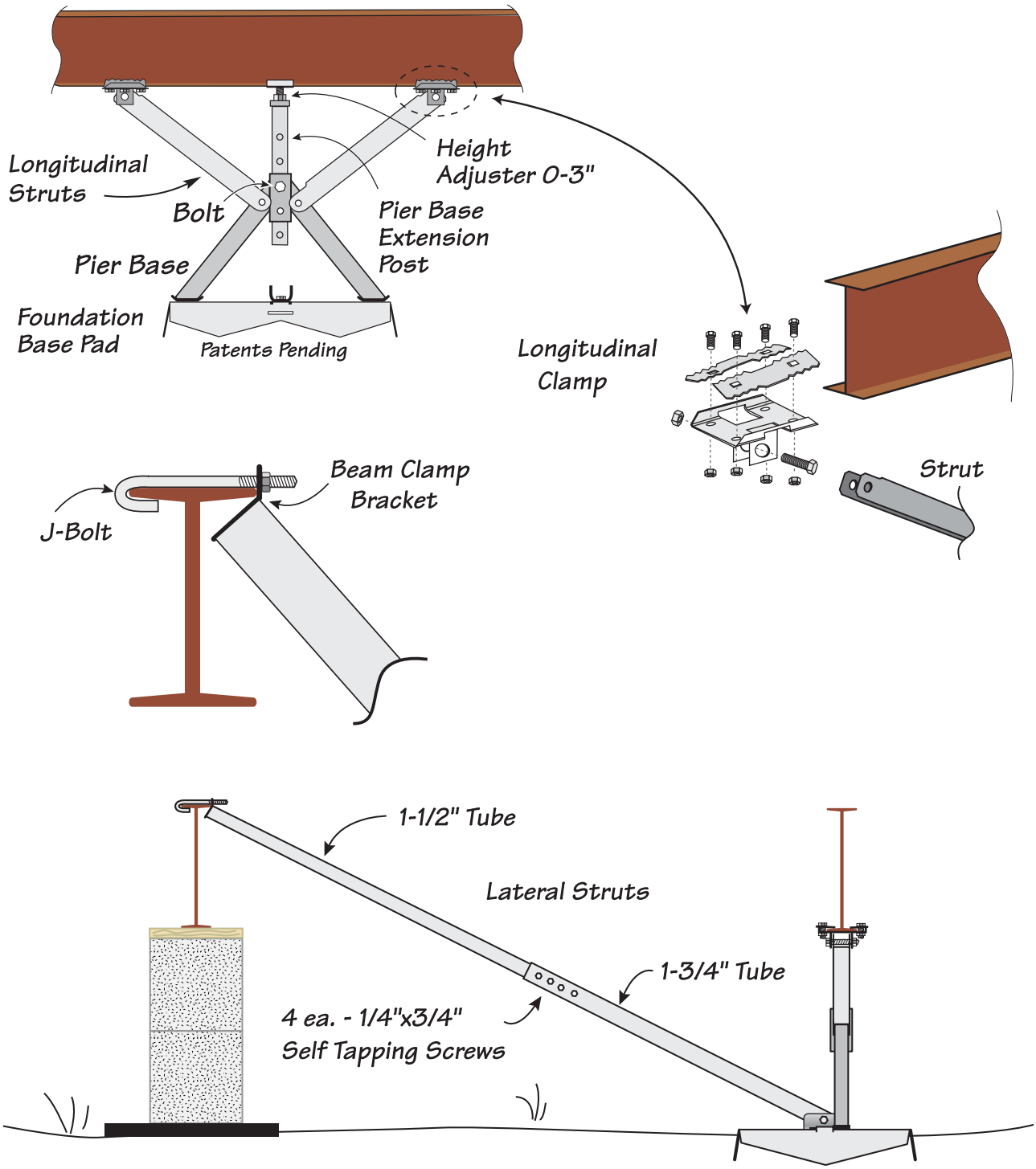

Figure 4.41 Self tapping screws set the strut length. All components hot galvanized coated.

REFERENCES

1. The American Institute of Architects. 1981. *Ramsey/Sleeper Architectural Graphic Standards*. Seventh Edition. New York: John Wiley and Sons, Inc.

2. American Society of Civil Engineers. ASCE 7-88. 1990. *Minimum Design Loads for Buildings and Other Structures*. Figure 1, Basic Wind Speed (mph).

3. Building Officials and Code Administrators International, Inc. *BOCA National Building Code, 1999 Commentary*. Illinois.

4. Dillon, R.M., ed. 1956. *Protection Against Decay and Termites in Residential Construction*. Building Research Institute, Publication 448. National Academy of Sciences/National Research Council.

5. International Code Council. 2000. *International Residential Code, For One- and Two-Family Dwellings*. Falls Church, VA.

6. International Conference of Building Officials. 1997. *Uniform Building Code*. Whittier, CA.

7. Krigger, John. 1998. *Your Mobile Home: Energy and Repair Guide for Manufactured Housing*. Fourth Edition. Helena, MT: Saturn Resource Management.

8. Lewis, Walter H., Harold B. Olin, John L. Schmidt. 1972. *Construction Principles, Materials and Methods*. Chicago: American Savings and Loan Institute Press.

9. Manufactured Housing Research Alliance. 2000. *Moisture Problems In Manufactured Homes: Understanding Their Causes and Finding Solutions*. Excellence in Design, Manufacturing and Installation Series. New York, NY.

10. Myers, Ned C., 1996. *Manufactured Home Foundation Design for Seasonally Frozen Ground*. Progressive Engineering, Inc.

11. National Conference of States on Building Codes and Standards. *Manufactured Home Installations*. NCSBCS/ANSI A225.1—1994. Approved by ANSI on January 4, 1994. Herndon, VA.

12. U.S. Department of Energy. Oak Ridge National Laboratory. 1988. *Building Foundation Design Handbook*. Prepared by Underground Space Center—University of Minnesota. Springfield, VA: National Technical Information Service, U.S. Department of Commerce.

13. U.S. Department of Housing and Urban Development. 1999. *Code of Federal Regulations: Title 24, Part 3280, Manufactured Home Construction and Safety Standards*.

14. U.S. Department of Housing and Urban Development. 1999. *Code of Federal Regulations: Title 24, Part 3282, Manufactured Home Procedural and Enforcement Regulations*.

15. U.S. Department of Housing and Urban Development. 1994. *Design Guide for Frost-Protected Shallow Foundations*. Prepared by NAHB Research Center. Upper Marlboro, MD. Instrument No. DU100K000005B97.

16. U.S. Department of Housing and Urban Development. 1999. *Manufactured Home Installation Training Manual*. Prepared by Steven Winter Associates, Inc. Rockville, MD: HUD Users Document Reproduction Service.

17. U.S. Department of Housing and Urban Development. 1996. *Permanent Foundations Guide for Manufactured Housing*. HUD-007487. Prepared by School of Architecture/Building Research Council, University of Illinois at Urbana-Champaign. Rockville, MD: HUD Users Document Reproduction Service.

18. U.S. Federal Emergency Management Agency. 1985. *Manufactured Home Installation in Flood Hazard Areas, FEMA 85*. Washington, D.C.: U.S. Government Printing Office.

19. U.S. Federal Emergency Management Agency. 1986. *Protecting Manufactured Homes From High Winds*. Washington, D.C.: U.S. Government Printing Office.

ADDITIONAL RESOURCES

PUBLICATIONS

1. American National Standard. 1994. *Manufactured Home Installations*. National Conference of States on Building Codes and Standards. NCS BCS/ANSI A225.1—1994.

2. *COSAA Manufactured Housing Reference Guide for State Installation Programs*. 1998. Council of State Administrative Agencies—Installation Committee.

3. Manufactured Housing Research Alliance. 2000. *Guidelines for Anchor System Design: Technical Support Document*. New York, NY.

4. Marshall and Yokel. 1995. *Recommended Performance-Based Criteria for the Design of Manufactured Home Foundation Systems to Resist Wind and Seismic Loads*. NISTIR 5664. Gaithersburg, MD: National Institute for Standards and Technology.

5. NAHB Research Center. 1993. *Stemwall Foundations for Residential Construction*. Upper Marlboro, MD.

6. Porter, George. 1996. *Manufactured Housing Installation and Repair*. Nassau, DE: Manufactured Housing Resources.

7. Porter, George. 1999. *The Past, Present and Future of Installations*. Manufactured Housing Resources, Manufactured Home Merchandiser.

8. Pearson, John, Anatol Longinow, Donald Meinheit. 1996. "Wind Protection Tie-Downs for Manufactured Homes." *ASCE Journal—Practice Periodical on Structural Design and Construction*.

9. Rosenberg, Cecelia. June 13, 1996. *Examples of Types of Floodplain Foundation*. Correspondence to Supplement National Flood Insurance Program (NFIP). Washington, D.C.: FEMA.

10. Rosenberg, Cecelia. August 22, 1995. *Pre-Engineered Standard Designs for Manufactured Home Foundations*. Correspondence to Developing Standard Foundation Systems. Washington, D.C.: FEMA.

11. U.S. Department of Commerce, National Bureau of Standards. 1981. *A Study of Reaction Forces on Mobile Home Foundations Caused by Wind and Flood Loads*. NBS Building Science Series.

12. U.S. Department of Housing and Urban Development. 1995, *Laboratory Testing of Soil Anchors,* HUD-0006546. Prepared by Wiss, Janney, Eistner Associates, Inc., Northbrook, IL.

13. U.S. Department of Housing and Urban Development. 1989. *Permanent Foundations Guide for Manufactured Housing*. HUD Handbook 4930.3. Prepared by Small Homes Council Building Research Council, University of Illinois. Champaign, IL.

14. U.S. Department of Housing and Urban Development. 1996. *Permanent Foundations Guide for Manufactured Housing—Software User's Guide*. HUD-7585. Prepared by School of Architecture/Building Research Council, University of Illinois. Champaign, IL.

15. U.S. Department of Housing and Urban Development. 1991. *Testing of Soil Anchors and Strapping*, WJE No. 901798. Prepared by Wiss, Janney, Eistner Associates, Inc., Northbrook, IL.

16. U.S. Department of Housing and Urban Development. 1995. *The Effect of Earthquakes on Manufactured Home Installations*. Prepared by National Conference of States on Building Codes and Standards, Inc., Herndon, VA.

17. U.S. Department of Housing and Urban Development. 1983. *Transportation Research Volume I Permanent Perimeter Foundations for Manufactured Housing*. HUD-H-5467. Prepared by Southwest Research Institute. San Antonio, TX.

STATE REGULATIONS FOR INSTALLATION PROGRAMS

Alabama: Alabama Manufactured Housing Commission Statutory Law, 1993.

Arizona: Department of Building and Fire Safety—Arizona Revised Statutes (Title 41), 1989; Suggested Methods of Complying with Mobile/Manufactured Home Installation Standards, 4th Edition; Article 2—Installation Standards and Codes; and 41-2175—Qualifications and Requirements for License.

Arkansas: Rules and Regulations for Manufactured Homes, 1989 and 1993 editions.

California: Mobile Home Installation Guide, May 1984; CA Code of Regulations Title 25, Division 1, Chapter 2—Mobile Home Parks, April 1,1991 and January 1992; and CA Health and Safety Division 13, Part 2.1—Mobile Parks Act, February 28, 1991.

Colorado: Installation and Set-Up Standards for Manufactured Housing—Resolution 20, August 21, 1991.

Florida: Motor Vehicle Laws, 1989 and 1993 editions; Rules 15C-1.0101 to 1.0110, Florida Administrative Code, January 10, 1994; New Frame and Tie Requirements, March 29, 1999; Section 3280.8249—FL Mobile Home Installer Statutes; and Installation Standards Revisions, March 29, 1999.

Georgia: H.B. 1039—Title 8, Article 2, Chapter 2, 1991 and March 18, 1992; Rules and Regulations for Manufactured Housing, Chapter 120-3-7, April 29, 1994; and The Manufactured Housing Act, April 29,1994.

Idaho: Title 44, Chapter 21—Senate Bill #1240 by Transportation Committee, 1988; Chapter 21—Manufactured Home Dealer and Broker License, April 28, 1994; ID Manufactured Home Installation Guide, 1994; and Idaho Manufactured Home Installation Standard, July 1, 2000.

Illinois: IL Manufactured Home Installation Act, Draft January 12, 1995; and Amendment to Senate Bill #429, May 2, 1995.

Indiana: Appendix C—CABO One- and Two-Family Dwelling Code, 1989; and IN Standard for the Permanent Installation of Manufactured Homes, October 19, 1982.

Iowa: IAC Division VI—Part 2, Section 661 - 16.620, November 16, 1988; and Senate File 2190, Code Supplement 1993, Section 335.30, May 10, 1994.

Kentucky: Title 815, Chapter 25—Manufactured Homes and Recreational Vehicles, February 1, 1994.

Maine: Chapter 900, Manufactured Home Installation Standard, March 1, 1993.

Maryland: Title 05—Department of Housing and Community Development, Subtitle 02, Chapter 04—Industrialized Buildings and Mobile Homes, July 9, 1990; and MD Building Performance Standards, Article 83B, Section 6, 1993.

Massachusetts: 780 CMR, Article 18—Manufactured Buildings, Home Components and Mobile Homes, September 1, 1980.

Michigan: Mobile Home Commission Rules, March 1987, February 2, 1990, Draft January 16, 1991, Draft June 19, 1991, Draft September 10, 1991, Draft October 22, 1991 and February 21, 1995; Mobile Home Commission Act and Other Related Statutes, December 1992; Mobile Home Commission Rules Handbook; and Installer and Servicer Licensing, October 16, 1995.

Minnesota: Manufactured Home Rules, Chapter 1350, April 3, 1989; Manufactured Home Building Code, Minnesota Statutes, 1988; Chapter 1350, Minnesota State Building Code—Manufactured Homes; and Administrative Law Judge Report on Chapter 1350, Proposed Amendments to Rule Governing Manufactured Homes, March 10, 2000; Manufactured Home Information Bulletin No. 31, June 27, 2000; and Minnesota Rules—Chapter 1350 -Rules Governing Manufactured Homes, June 26, 2000.

Mississippi: Rules and Regulations of the Mobile Home Division for Factory Manufactured Movable Homes, MH-4, 1991; State Statutes Sections 75-49-1 to 75-49-19, Factory Manufactured Movable Homes, MH-5, 1991; Rules and Regulations for the Uniform Standards Code for the Factory-Built Homes Law, Section 25-41-1, MS Code—1972, Annotated August 17, 1992; and State Fire Marshal's Office, Manufactured Housing Division, Blocking, Anchoring and Tie Downs, Bulletin 93-4, 1993.

Missouri: Title XLI, Codes and Standards, Chapter 700, Manufactured Homes (Mobile Homes), June 2, 1994; and Final Draft—MO Anchor Installation Standards, October 29, 1997.

Nevada: NAC 489, Sections .400, .405, .410, .415, .420, .425, .430, .435, .440, .445, .450 and .455, November 22, 1985.

New Jersey: Bureau of Construction Code Enforcement, Bulletin 80-6, September 15, 1980; Uniform Construction Code, Sections 5:23-2.15 to 5:23-2.16, November 19, 1990; Title 5, Chapter 21, Residential Site Improvement Standards, January 6, 1997; and Title 5, Chapter 23, Subchapter 6, Uniform Construction Code Rehabilitation Subcode, January 5, 1998.

New Mexico: Manufactured Housing Act and Regulations, January 1, 1990; and Manufactured Housing Division Regulations Amendments, November 12, 1990.

New York: Title 9, Parts 1222 and 1223, June 6, 1984; and An Installation Guide for the Code Enforcement Official—Mobile/Manufactured Homes, January 1997.

North Carolina: Regulations for Manufactured/Mobile Homes, 1989 Edition; Standard Pier and Anchor Placement Tables, July 9, 1993; and Regulations for Manufactured/Mobile Homes, 1995 edition.

Ohio: Ohio Basic Building Code, Section 621.0, January 1, 1989; and Ohio Regulation 3701-27-082, Tie Downs, Supports, Blocking, May 4, 1994.

Oklahoma: Generic Installation Code for Manufactured Homes, January 7, 1997.

Oregon: Manufactured Dwelling Administrative Rules, Chapter 918, Divisions 500, 505, 510, 515 and 520, January 1990; Oregon Manufactured Dwelling Standard, 1997 edition; and Manufactured Home Installation Survey, May 39, 1995.

Pennsylvania: General Assembly of PA, House Bill #97, Referred to Committee on Consumer Affairs, January 19, 1995.

South Carolina: South Carolina Manufactured Housing Board Regulations, May 25, 1990.

South Dakota: Public Health and Safety Code, SL 1990, Chapter 278, Section 2, Part 34-34A, July 1, 1991.

Tennessee: ANCB Regulations, Chapter 0780-2-5, Stabilizing Manufactured Homes, 1993.

Texas: Texas Department of Licensing and Regulation, Manufactured Housing, Chapter 69, September 1991; Architectural Barriers Act, September 1, 1997; Proposed Rewrite of Manufactured Housing Division Administrative Rules, 10 Texas Administrative Code, Chapter 80, Draft January 22, 1998; and TX MHA Proposed Rules by TDHCA, March 9, 1998.

Vermont: Vermont Fire Prevention and Building Code, 1989 edition.

Virginia: VA Industrialized Building and Manufactured Home Safety Regulations, March 1, 1991.

Washington: Washington Administrative Code, WAC 296-150B, Sections 185, 200, 205, 210, 215, 220, 225, 230, 235, 240, 245, 250, 255 and 300, 1991 edition.

West Virginia: Adopted ANSI A225.1—1994 edition.

Wisconsin: Wisconsin Administrative Code, Comm 27.18—Pier Foundation, December 1997.

INTERNATIONAL CODE COUNCIL

1. Guidelines for Manufactured Housing Installations, Appendix C, 1985.

2. One- and Two-Family Dwelling Code, Appendix C, 1986.

3. One- and Two-Family Dwelling Code, Appendix C, 1989.

4. One- and Two-Family Dwelling Code, Appendix C, 1992.

5. One- and Two-Family Dwelling Code, Appendix A: Manufactured Housing Used as Dwellings, 1995.

6. International One- and Two-Family Dwelling Code, Appendix A: Manufactured Housing Used as Dwellings, 1998.

7. International Residential Code, Appendix E: Manufactured Housing Used as Dwellings, 2000.

INTERNATIONAL CONFERENCE OF BUILDING OFFICIALS

Guidelines for Manufactured Housing Installations, 1991.

DEPARTMENT OF HIGHWAY SAFETY AND MOTOR VEHICLES—FLORIDA

Anchor and Tie-Down Installation Standards for Mobile/Manufactured Homes and Park Trailers, Part I—Installation and Inspection, January 1996

EDUCATION, TRAINING AND ACCREDITATION PROGRAMS FOR INSTALLERS AND INSPECTORS

1. PA Manufactured Housing Association, *PMHA Installation Course for Manufactured Housing*, Manufactured

2. *Model Manufactured Home Installation Manual*, Manufactured Housing Institute, Arlington, VA, April 1992.

3. *Manufactured Housing in Washington State—Monitoring Compliance with Map Set-Up Specifications*, WA State Energy Office, Olympia, WA, August 1994.

4. *Manufactured Home Installation Training Manual*, Steven Winter Associates, Norwalk, CN, April 1999, HUD-PDR, April 1999.

SAMPLING OF INSTALLATION COSTS

1. White Craig, "Industry Needs Change in Sitting and Distribution", *Manufactured Home Merchandiser*, Chicago, IL, May 1987.

2. *Manufactured Home Installations Costs Survey*, Manufactured Housing Institute, Arlington, VA, December 19, 1997.

FROST-PROTECTED FOUNDATION RESEARCH

1. **Progressive Engineering Incorporated (PE) Drafts and Reports**

    1. Update on Frost Penetration Project, March 10, 1995.

    2. *Frost Penetration Investigation Report*, December 1995 – February 1996, 94-1780 (B).

    3. *Frost Penetration Investigation Report (with Appendix A)*, December 1995 – February 1996, 94-1780(C).

    4. Frost Penetration Investigation Correspondence and Details.

5. *Frost Penetration Investigation Draft Test Report*, March 24, 1995, 94-1780.

6. *Frost Penetration Investigation Report*, March 24, 1995, 94-1780.

7. *Manufactured Housing Foundation Design for Seasonally Frozen Ground—Draft Reports*, April 17, 1995 and May 15, 1995

8. *Manufactured Housing Foundation Design for Seasonally Frozen Ground—Final Report*, June 14, 1996.

2. **NAHB Research Center**

1. *Frost Protected Shallow Foundations in Residential Construction—Phase I*, NAHB Research Center, Upper Marlboro, MD, April 1993.

2. *Frost Protected Shallow Foundations—Phase II Final Report*, NAHB Research Center, Upper Marlboro, MD, June 1994.

3. *Design Guide for Frost Protected Shallow Foundations*, NAHB Research Center, Upper Marlboro, MD, June 1994.

4. *Energy-Efficient Frost Protected Shallow Foundations*, NAHB, Washington, D.C., 1999.

3. **Building Research Establishment (Glasgow, UK)**

1. CEN/TC 89, *Building Foundations—Protection Against Frost Heave*, November 2, 1993.

GLOSSARY

ABS
Acrylonitrile butadiene styrene. Plastic material used in the fabrication of footers under manufactured homes and stabilizer plates for auguring ground anchors.

Base flood level
Defined by FEMA in 44 CFR, Chapter 1 as the flood level that has a one percent (1%) probability of being equaled or exceeded in any given year.

Basement
That portion of a building that is partly or completely below grade (see "story above grade").

Chassis
The steel trailer that carries the weight of the manufactured home. The entire transportation system includes the following subsystems: drawbar and coupling mechanism, frame, running gear assembly, and lights.

Crawl space
A crawl space incorporates full perimeter wall support together with internal, independent support points; the space itself is not habitable.

Dead loads
The weight of all materials of construction incorporated into the building, including but not limited to walls, floors, roofs, ceilings, stairways, built-in partitions, finishes, cladding, and other similarly incorporated architectural and structural items, and fixed service equipment.

Expansive soils
Soils that change volume significantly as their moisture content changes.

FEMA
Federal Emergency Management Agency.

FHA
Federal Housing Administration within the U.S. Department of Housing and Urban Development.

Flashing
Sheet metal or other material used to seal around penetrations to resist moisture intrusion.

Floating slab
A type of foundation that generally does not run to below the frost line and is designed to move as a unit without differential settlement or cracking as the soil underneath expands and contracts due to forces such as frost heave.

Flood plain or flood-prone area
Any land area susceptible to being inundated by water from any source.

Floodway
See regulatory floodway.

Footers
The parts of a foundation system that actually transmit the weight of the building to the ground.

Grade
The finished ground level adjoining the building at all exterior walls.

HUD
U.S. Department of Housing and Urban Development.

HUD-code home
A home meeting the U.S. Department of Housing and Urban Development's standards for new manufactured homes, known as the Manufactured Home Construction and Safety Standards.

I-beam

One of two steel beams shaped like an "I" that provides the main support for a manufactured home and constitutes the main structural element of the chassis or trailer.

Live loads

Those loads produced by the use and occupancy of the building or other structure and not including construction loads or environmental loads such as wind load, snow load, rain load, earthquake load, flood load, or dead load.

Manufactured home

As defined in Code of Federal Regulations: Part 3280, a manufactured home is "a structure, transportable in one or more sections, which in the traveling mode is 8 body feet (2438 body mm) or more in width or 40 body feet (12 192 body mm) or more in length, or, when erected on site, is 320 square feet (30 m2) or more, and which is built on a permanent chassis and designed to be used as a dwelling with or without a permanent foundation when connected to the required utilities, and includes the plumbing, heating, air-conditioning and electrical systems contained therein; except that such term shall include any structure that meets all the requirements of this paragraph except the size requirements and with respect to which the manufacturer voluntarily files a certification required by the secretary (HUD) and complies with the standards established under this title; and except that such term shall not include any self propelled recreational vehicle. For mobile homes built prior to June 15, 1976, a label certifying compliance to the Standard for Mobile Homes, NFPA 501, in effect at the time of manufacture is required. For the purpose of these provisions, a mobile home shall be considered a manufactured home."

Marriage or mating wall

The joint between two sections of a double-section or triple-section home.

Penetrometer

An instrument for measuring firmness or consistency (as of soil).

Permanent foundation

The U.S. Department of Housing and Urban Development (HUD) defines permanent foundation systems in its *Manufactured Home Procedural and Enforcement Regulations* as follows:

"(ii) A site-built permanent foundation is a system of supports, including piers, either partially or entirely below grade which is:

(A) Capable of transferring all design loads imposed by or upon the structure into soil or bedrock without failure,

(B) Placed at an adequate depth below grade to prevent frost damage, and

(C) Constructed of concrete, metal, treated lumber or wood, or grouted masonry."

Piers

Short columns of masonry or steel that provide support between the footing and the main beam.

Psf

Pounds per square foot.

Psi

Pounds per square inch.

Regulatory floodway

The channel of a river or other watercourse and the adjacent land areas that must be reserved in order to discharge the base flood without cumulatively increasing the water surface elevation more than a designated height.

Rim joist

The outermost joist around the perimeter of the floor framing.

Riverine
Relating to, formed by, or resembling a river (including tributaries), stream, brook, etc.

Shear wall
A general term for walls that are designed and constructed to resist racking from seismic and wind forces by use of masonry, concrete, cold-formed steel or wood framing.

Skirting
Weather-resistant framing and sheeting used to enclose the crawl space of a manufactured home.

Slope
The fall (pitch) of a line of pipe in reference to a horizontal plane. In drainage, the slope is expressed as the fall in units vertical per units horizontal (percent) for a length of pipe.

Soil test torque probe
Device for drilling into the ground for measuring the resistance of the soil to anchor pullout.

Stabilizer plates
Metal or plastic device, typically 8- to 12-in. wide and 12- to 18-in. deep used with ground anchor to resist lateral movement of the head of the anchor.

Story above grade
The International Residential Code defines story above grade as "any story having its finished floor surface entirely above grade, except that a basement is considered a story above grade when the finished surface of the floor above the basement is:

1. More than 6 ft (1829 mm) above grade plane.
2. More than 6 ft (1829 mm) above the finished ground level for more than 50% of the total building perimeter.
3. More than 12 ft (3658 mm) above the finished ground level at any point."

Tie downs
Straps or cables attaching the home to ground anchors.

Vapor retarder
A material having a permeance rating of 1.0 or less when tested in accordance with ASTM E 96.

Vent
A passageway for conveying flue gases from fuel-fired appliances, or their vent connectors, to the outside atmosphere.